ALSPEC ALUMINIUM SYSTEMS

TECHNICAL MANUAL

HR500 HIGH PERFORMANCE BALUSTRADE

COPYRIGHT

This Technical manual remains the property of Aluminium Specialties Group Pty Limited and contains privileged information which is the subject of copyright and the manual or any part thereof may not be reproduced, copied or loaned in any form without the written permission of Aluminium Specialties Group Pty Limited.

This manual is to be returned to Aluminium Specialties Group Pty Limited when requested.

DISCLAIMER

Whilst every effort has been made to ensure the technical details contained within this manual are accurate, Aluminium Specialties Group Pty Limited can take no responsibilities for any loss or damage whatsoever arising as a result of any errors contained in this manual.

Also, interpretation of standards or codes within this manual is Aluminium Specialties Group Pty Limited interpretation for such codes. Responsibility for code compliance remains with the user of this manual. In some cases product dimensions may vary or be changed without notice. The user of this manual should not act or rely upon on any information contained in this manual without first obtaining appropriate professional advice relating to their particular circumstances.

Aluminium Specialties Group Pty Limited disclaims all liability for loss or damage suffered by any party who acts or fails to act in reliance of this manual.

ALSPEC ALUMINIUM SYSTEMS

TECHNICAL MANUAL

HR500 HIGH PERFORMANCE BALUSTRADE

Section 2.1

SPECIFICATION

ALUMINIUM

- All structural elements in the HR500 Balustrade have been extruded in structural grade alloy for enhanced strength and performance.

GLAZING

- 19mm wide glazing pocket allowing glass up to 15mm thick, and the ability to facet panels on a curved façade.
- 2, 3 or 4 side support glazing options

MOUNTING SOLUTIONS

- The HR500 Balustrade offers flexible mounting solutions to cater for a variety of applications and strength requirements.
- Heavy duty base plates manufactured from structural grade alloy and core drilled solutions have been engineered and tested to AS1657 in accordance with the loads specified in AS1170.1

TESTED AND ENGINEERED

- The HR500 Balustrade is the product of many hours of design, development and testing. The result is a high performance balustrade system capable of resisting the highest wind loads and crowd loads, whilst maintaining ease of fabrication and installation.

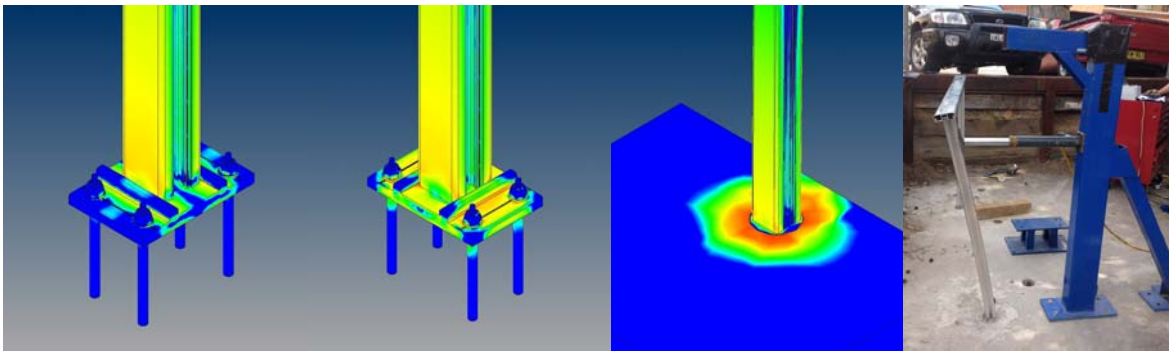

All products are available from ALSPEC (A.B.N. 63 001 252 259) as detailed in the "ALSPEC" Catalogue or on the Internet at www.alspec.com.au . All such framing is to be constructed, assembled and fixed to meet the requirements of AS2047 (windows in buildings), AS1170 (loading code). All glass, glazing rubbers, seals and gaskets shall be applied in accordance with the requirements of AS1288 (glass in buildings – selection and installation).

Fabricators of the HR500 Balustrade system should seek confirmation of design wind pressure and loading criteria from the building designer. Please contact Alspec technical department if any detail is in question, or if the application, size or scope of the project is unclear.

ALSPEC ALUMINIUM SYSTEMS

TECHNICAL MANUAL

HR500 HIGH PERFORMANCE BALUSTRADE

Section 2.2

LOADING TABLES

The following pages contain loading tables that may be used as a guide to the suitability of the ALSPEC HR500 Balustrade for various wind loads and live loads.

The classification of a building is determined by the purpose for which it is designed, constructed or adapted for use. The determination of the buildings end use is essential in calculating the balustrade rating and performance requirements.

As1170.1 classifies balustrades into different classes depending on their application.

This technical manual groups these into 3 main classes, residential (C3), commercial (C1), and areas susceptible to overcrowding (C5) for more information refer AS1170.1

1. Residential (C3), Residential balconies, landings, roof edges, etc
2. Commercial (C1) Retail, public areas, restaurants, banks, etc
3. Overcrowding (C5) Areas susceptible to overcrowding and or, grandstands, theatres, clubs, etc

Residential balconies, landings, roof edges, etc

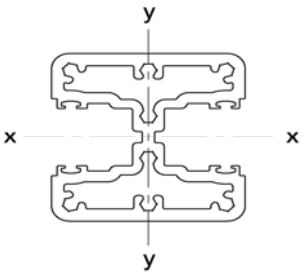

Referred to as C3, B, E in AS1170.1

If the area is susceptible to overcrowding, refer C5

HR500 **55mm 2 WAY POST**
Alloy: 6106 T6
Ultimate Limit State: 210 MPa
Minimum Live Load: 750 N/m

Post Height		POST PERFORMANCE TABLE								
1200	LL	2590	2360	2160	1990	1850	1730	1620	1520	1440
	Pu	4320	3930	3600	3320	3090	2880	2700	2540	2400
1150	LL	2700	2460	2250	2080	1930	1800	1690	1590	1500
	Pu	4710	4280	3920	3620	3360	3140	2940	2770	2610
1100	LL	2830	2570	2360	2170	2020	1880	1770	1660	1570
	Pu	5140	4680	4290	3960	3670	3430	3210	3020	2860
1050	LL	2960	2690	2470	2280	2110	1970	1850	1740	1640
	Pu	5650	5130	4700	4340	4030	3760	3530	3320	3130
1000	LL	3110	2830	2590	2390	2220	2070	1940	1830	1730
	Pu	6230	5660	5190	4790	4450	4150	3890	3660	3460
Post Ctrs		**1000**	**1100**	**1200**	**1300**	**1400**	**1500**	**1600**	**1700**	**1800**

Pu= Ultimate Wind Pressure (Pa)

LL= Maximum Live Crowd Load (N/m)

Tested Mounting Solutions

Core Drilled	Side Mount Base Plate	Top Mount Base Plate
	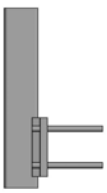	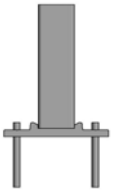
100mm Embedment Depth	Alspec Base Plate Alspec Chemical Anchors	Alspec Base Plate Alspec Chemical Anchors
120mm Embedment depth required for wind loads exceeding 5kPa	***Restricted to wind pressures below 5kPa***	**Restricted to wind pressures below 4kPa**

Retail, public areas, restaurants, banks, etc

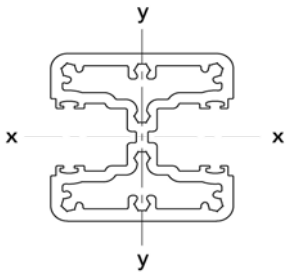

Referred to as C1, C2, D in AS1170.1

If the area is susceptible to overcrowding, refer C5

HR500 **55mm 2 WAY POST**
Alloy: 6106 T6 **Ultimate Limit State:** 210 MPa **Minimum Live Load:** 1500 N/m

Post Height	POST PERFORMANCE TABLE										
1200	LL	2590	2360	2160	1990	1850	1730	1620		
	Pu	4320	3930	3600	3320	3090	2880	2700		
1150	LL	2700	2460	2250	2080	1930	1800	1690		
	Pu	4710	4280	3920	3620	3360	3140	2940		
1100	LL	2830	2570	2360	2170	2020	1880	1770	1660	
	Pu	5140	4680	4290	3960	3670	3430	3210	3020	
1050	LL	2960	2690	2470	2280	2110	1970	1850	1740	1640
	Pu	5650	5130	4700	4340	4030	3760	3530	3320	3130
1000	LL	3110	2830	2590	2390	2220	2070	1940	1830	1730
	Pu	6230	5660	5190	4790	4450	4150	3890	3660	3460
Post Ctrs		**1000**	**1100**	**1200**	**1300**	**1400**	**1500**	**1600**	**1700**	**1800**

Pu= Ultimate Wind Pressure (Pa)

LL= Maximum Live Crowd Load (N/m)

Tested Mounting Solutions

Core Drilled	Side Mount Base Plate	Top Mount Base Plate
	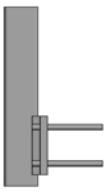	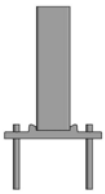
100mm Embedment Depth	Alspec Base Plate Alspec Chemical Anchors	Alspec Base Plate Alspec Chemical Anchors
120mm Embedment depth required for wind loads exceeding 5kPa	***Restricted to wind pressures below 5kPa***	**Restricted to sizes below the black line in the chart and/or wind pressures below 4kPa**

Areas susceptible to overcrowding, grandstands, theatres, clubs, etc

Referred to as C5 in AS1170.1

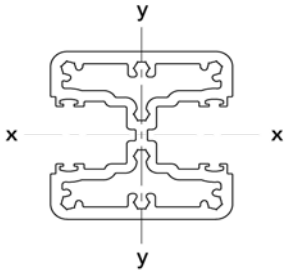

HR500
55mm 2 WAY POST

Alloy: 6106 T6

Ultimate Limit State: 210 MPa

Minimum Live Load: 3000 N/m

Post Height		POST PERFORMANCE TABLE							
1200	LL	3240							
	Pu	5400							
1150	LL	3380	3180						
	Pu	5880	5540						
1100	LL	3540	3330	3140					
	Pu	6430	6050	5720					
1050	LL	3700	3490	3290	3120				
	Pu	7060	6640	6270	5940				
1000	LL	3890	3660	3460	3270	3110			
	Pu	7780	7330	6920	6550	6230			
Post Ctrs		**800**	**850**	**900**	**950**	**1000**	**1050**	**1100**	**1150**

Pu= Ultimate Wind Pressure (Pa)

LL= Maximum Live Crowd Load (N/m)

Tested Mounting Solution

Core Drilled

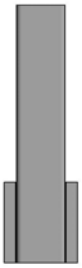

120mm Embedment Depth

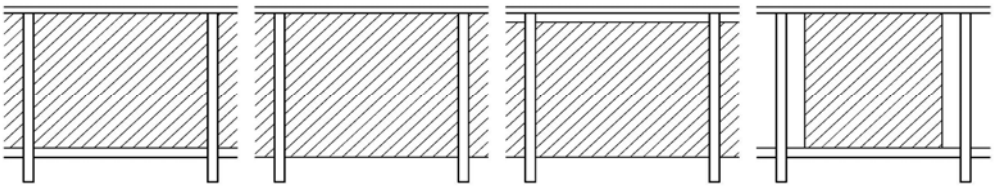

Residential Balconies, landings, roof edges, etc

Referred to as C3, B, E in AS1170.1

Post Height	GLASS INFILL SELECTION TABLE									
1200	Min glass thickness	10	10	10	10	10	10	10	10	12
1150		10	10	10	10	10	10	10	10	12
1100		8	8	10	10	10	10	10	10	12
1050		8	8	10	10	10	10	10	10	12
1000		8	8	10	10	10	10	10	10	12
Post Ctrs		**1000**	**1100**	**1200**	**1300**	**1400**	**1500**	**1600**	**1700**	**1800**

All glass specified is toughened safety glass.

Retail, public areas, restaurants, banks, etc

Referred to as C1, C2, D in AS1170.1

Post Height	GLASS INFILL SELECTION TABLE									
1200	Min glass thickness	15	15	15	15	15	15	15		
1150		15	15	15	15	15	15	15		
1100		12	15	15	15	15	15	15	15	
1050		12	15	15	15	15	15	15	15	15
1000		12	15	15	15	15	15	15	15	15
Post Ctrs		**1000**	**1100**	**1200**	**1300**	**1400**	**1500**	**1600**	**1700**	**1800**

All glass specified is toughened safety glass.

Areas susceptible to overcrowding, grandstands, theatres, clubs, etc

Referred to as C5 in AS1170.1

Post Height	GLASS INFILL SELECTION TABLE									
1200	Min glass thickness	15								
1150		15	15							
1100		12	15	15						
1050		12	12	12	12					
1000		12	12	12	12	12				
Post Ctrs		**800**	**850**	**900**	**950**	**1000**	**1050**	**1100**	**1150**	**1200**

All glass specified is toughened safety glass.

The above glass selections have been based on AS1288-2006 section 7. In some cases, wind loads may exceed the infill design load and thicker glass may be required.

Whilst every effort has been made to ensure the corect Interpretation of standards or codes, responsibilty for code compliance remains with the user of this manual.

Extrusions

VISIBLE SURFACES

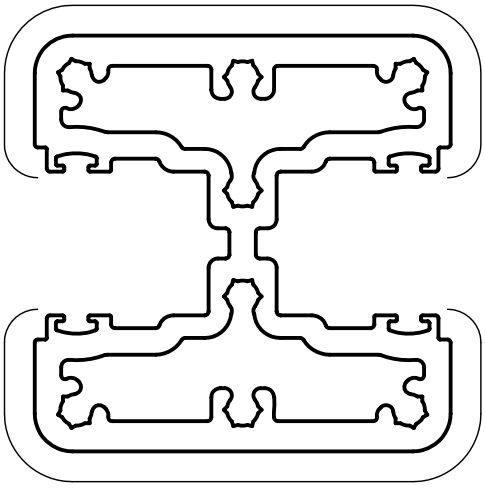

HR500
2 WAY POST

Mass. 2.973 Kg/m
Anod. Per. 667
Paint Per. 167

Ixx = 407.8 x 10^3 mm^4

VISIBLE SURFACES

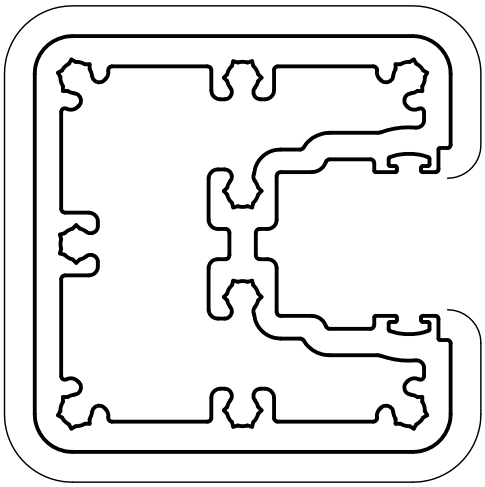

HR506
1 WAY POST

Mass. 2.813 Kg/m
Anod. Per. 628
Paint Per. 189

Ixx = 386.8 x 10^3 mm^4

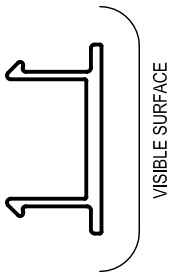

HE320
POCKET FILLER

Mass. 0.188 Kg/m
Anod. Per. 100
Paint Per. 100

© ALSPEC
ALUMINIUM SPECIALTIES GROUP PTY LTD

Extrusions

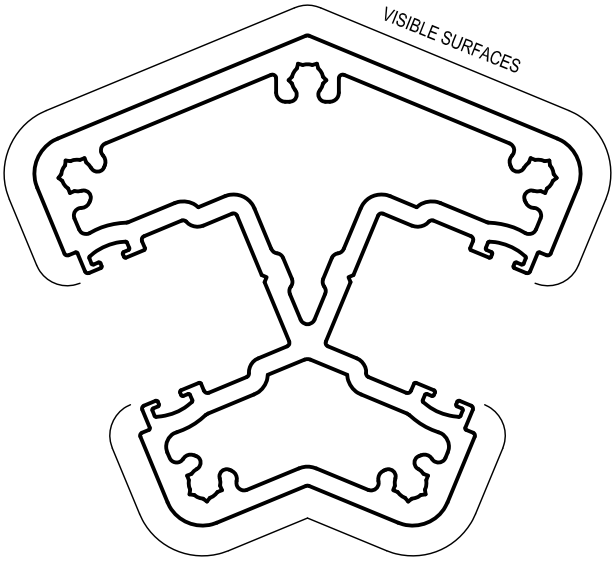

HR503
135 DEG POST

Mass. 2.499 Kg/m
Anod. Per. 670
Paint Per. 174

Ixx = 342.7 x 10^3 mm^4

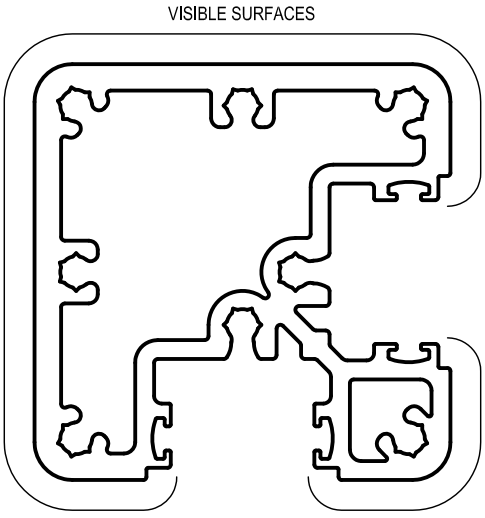

HR501
90 DEG POST

Mass. 2.540 Kg/m
Anod. Per. 658
Paint Per. 167

Ixx = 319.7 x 10^3 mm^4

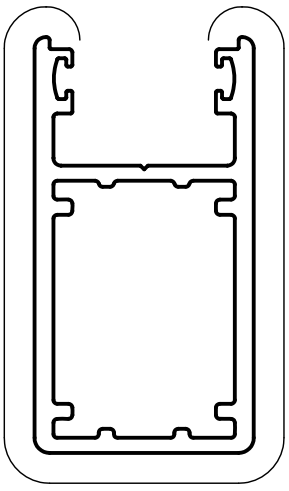

HR502
BOTTOM RAIL

Mass. 1.129 Kg/m
Anod. Per. 359
Paint Per. 143

Ixx = 57.4 x 10^3 mm^4
Iyy = 121.6 x 10^3 mm^4

© ALSPEC
ALUMINIUM SPECIALTIES GROUP PTY LTD

Extrusions

HR505
BULL NOSE TOP RAIL

Mass. 0.811 Kg/m
Anod. Per. 317
Paint Per. 156

Ixx = 342.0 x 10^3 mm^4
Iyy = 35.4 x 10^3 mm^4

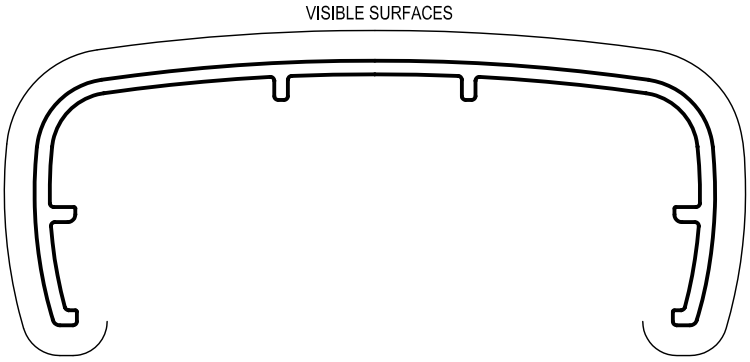

TAPERED TOP RAIL

Mass. 0.915 Kg/m
Anod. Per.
Paint Per.

Ixx = 496.5 x 10^3 mm^4
Iyy = 38.0 x 10^3 mm^4

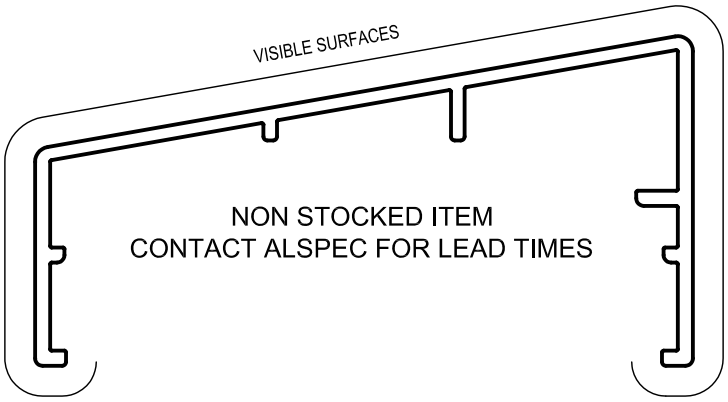

SQUARE TOP RAIL

Mass. 0.856 Kg/m
Anod. Per.
Paint Per.

Ixx = 364.2 x 10^3 mm^4
Iyy = 40.2 x 10^3 mm^4

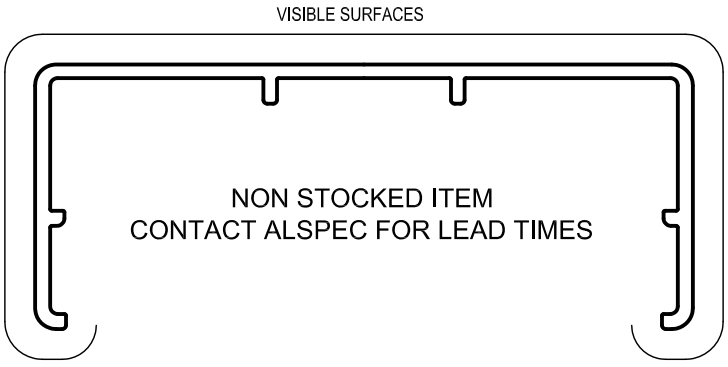

HR507
TOP RAIL BASE

Mass. 1.332 Kg/m
Anod. Per. 399
Paint Per. 100

Ixx = 305.7 x 10^3 mm^4
Iyy = 54.6 x 10^3 mm^4

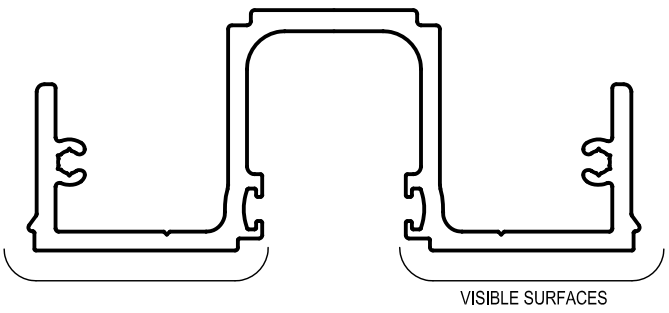

© ALSPEC
ALUMINIUM SPECIALTIES GROUP PTY LTD

HARDWARE

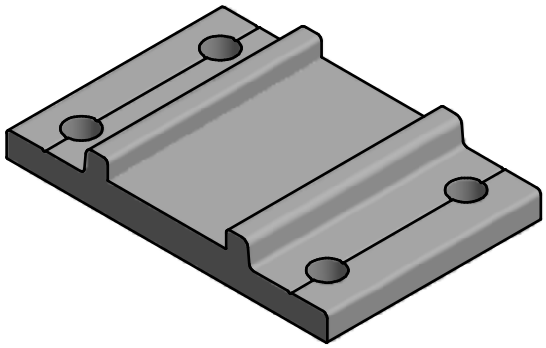

HRA4 BASE PLATE
Part # 1331151
Finish: Mill Finish Aluminium Extrusion
Qty: Each

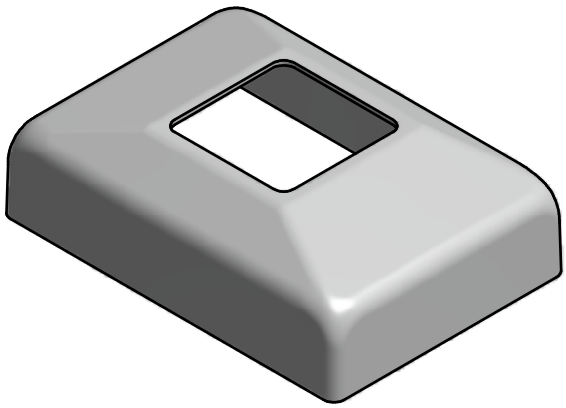

HRA5 BASE PLATE COVER
Part # 1331152
Finish: Mill Finish Alloy Casting
Qty: Each

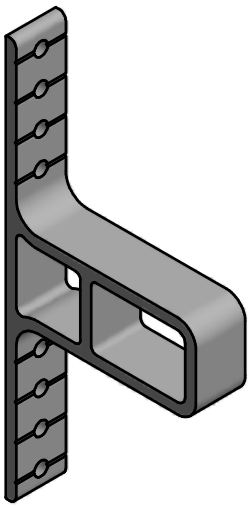

HRA3 BOTTOM RAIL SPIGOT
Part # 1331150
Finish: Mill Finish Aluminium Extrusion
Qty: Each

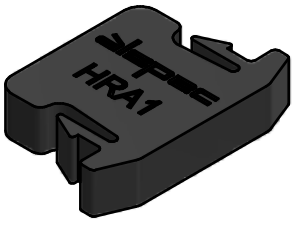

HRA1 GLASS SUPPORT BLOCK
Part # 1331110
Finish: Black Plastic
Qty: Each

© ALSPEC
ALUMINIUM SPECIALTIES GROUP PTY LTD

HARDWARE

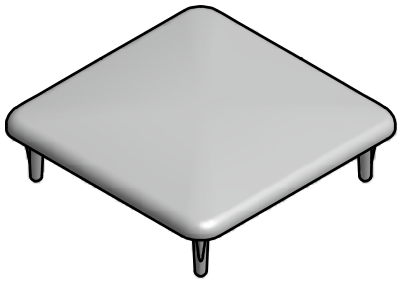

HRA13 POST END CAP
Part #
Finish: Mill Finish Alloy Casting
Qty: Each

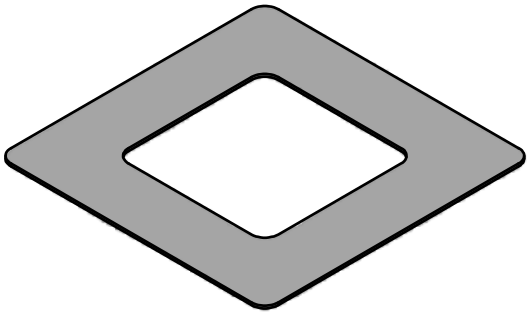

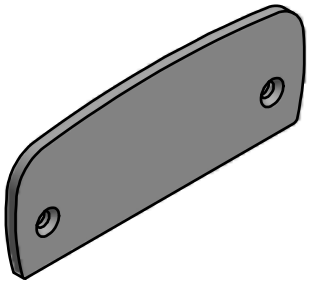

HRA2 DRESS RING
Part # 1331111
Finish: Mill Finish Aluminium
Qty: Each

HR505C BULLNOSE RAIL END CAP
Part # 1331119
Finish: Mill Finish Aluminium
Qty: Each

HRA7 M10 X 130mm HIGH TENSILE STUD KIT (Includes studs, washers & nyloc nuts)
Part # 1331121
Finish: 316 Stainless Steel
Qty: 10 Per Pack

HRA9 CHEMICAL INJECTION STARTER KIT (Includes 3 x 420ml cartridges, 1 x cartridge gun, 6 x nozzles, 1 x blow pump, 4 x brushes)
Part # 1331124
Qty: Each

© ALSPEC
ALUMINIUM SPECIALTIES GROUP PTY LTD

HARDWARE

HRA10 INJECTION MIXER NOZZLE
Part # 1331125
Qty: Each

HRA8 CHEMICAL INJECTION CART - 420mls (Approx 60 holes per cartridge at Ø12 x 100mm)
Part # 1331122
Qty: Each

12mm MASONARY BIT - High Speed 3 Blade (Recommended for steel reinforced concrete)
Part # 1331131
Qty: Each

HRA6 CHEMICAL CAPSULE - M10
Part # 1331120
Qty: 10 Per Pack

HRA12 BLOW PUMP HOLE CLEANER
Part # 1331127
Qty: Each

HRA11 BRUSH HOLE CLEANER (10-14mm holes)
Part #1331126
Qty: Each

© ALSPEC
ALUMINIUM SPECIALTIES GROUP PTY LTD

HR500 BALUSTRADE

55mm Pocketed Post System

Typical Elevation

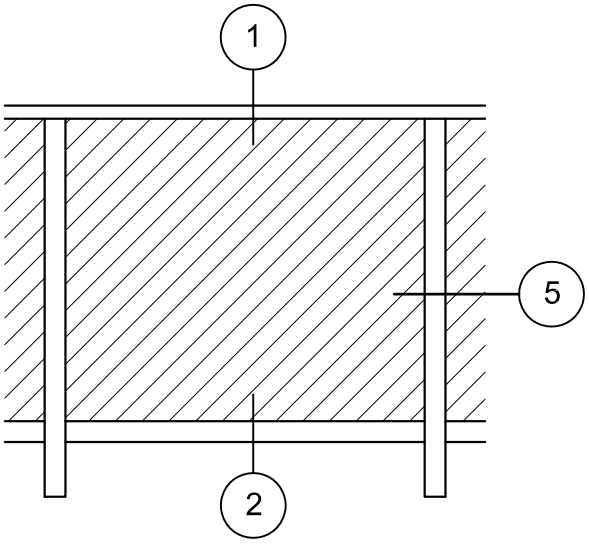

4 SIDE SUPPORT

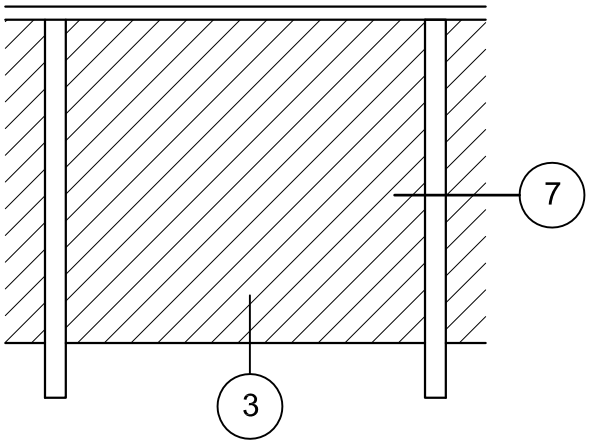

3 SIDE SUPPORT

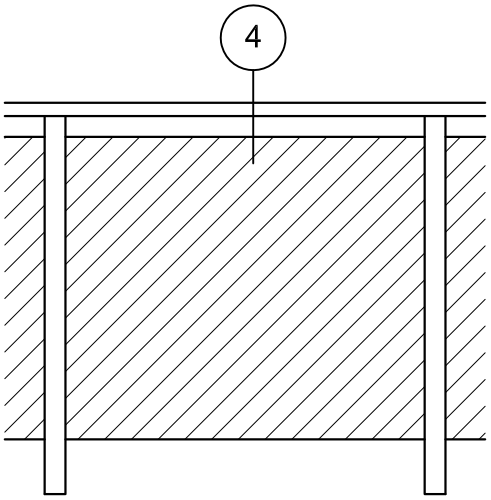

2 SIDE VERTICAL SUPPORT

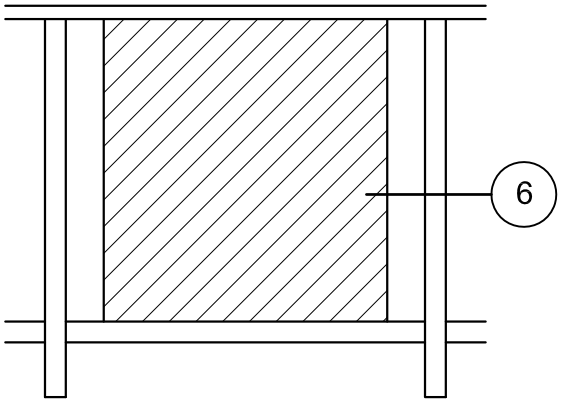

2 SIDE HORIZONTAL SUPPORT

PLEASE CONTACT ALSPEC FOR ASSISTANCE IF THE BALUSTRADE DESIGN OR CONFIGURATION DIFFERS FROM THE ABOVE TYPICAL ELEVATIONS

© ALSPEC
ALUMINIUM SPECIALTIES GROUP PTY LTD

BALUSTRADE DETAIL - 4 SIDE SUPPORT

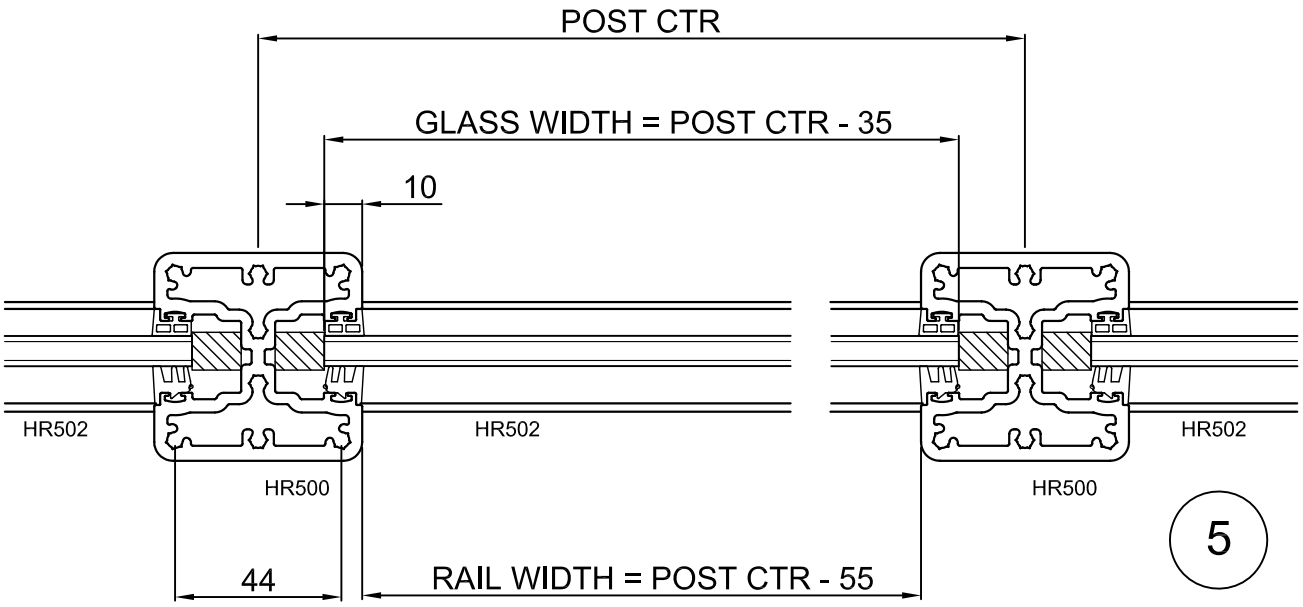

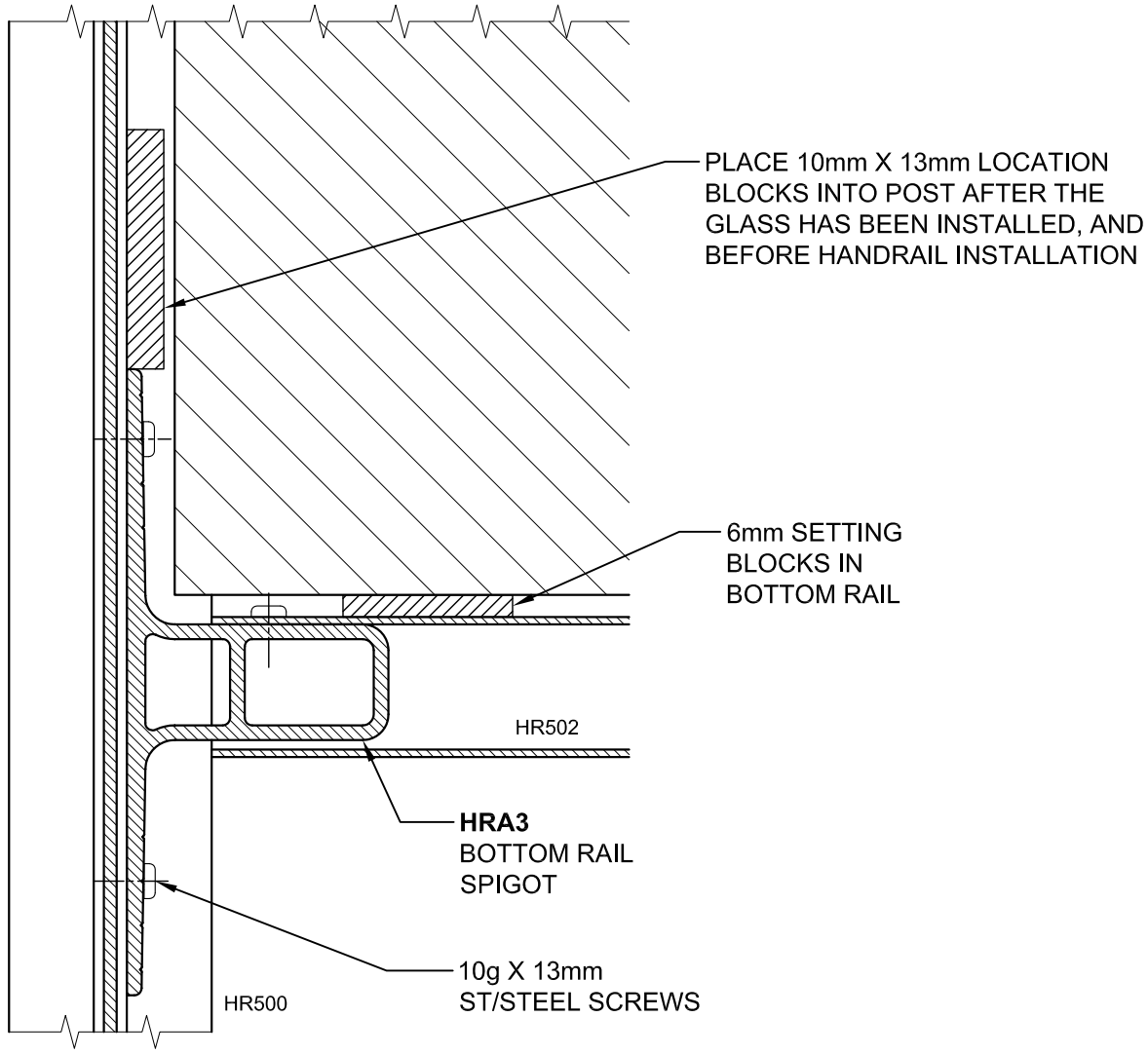

© ALSPEC
ALUMINIUM SPECIALTIES GROUP PTY LTD

BALUSTRADE DETAIL - 2 OR 3 SIDE SUPPORT

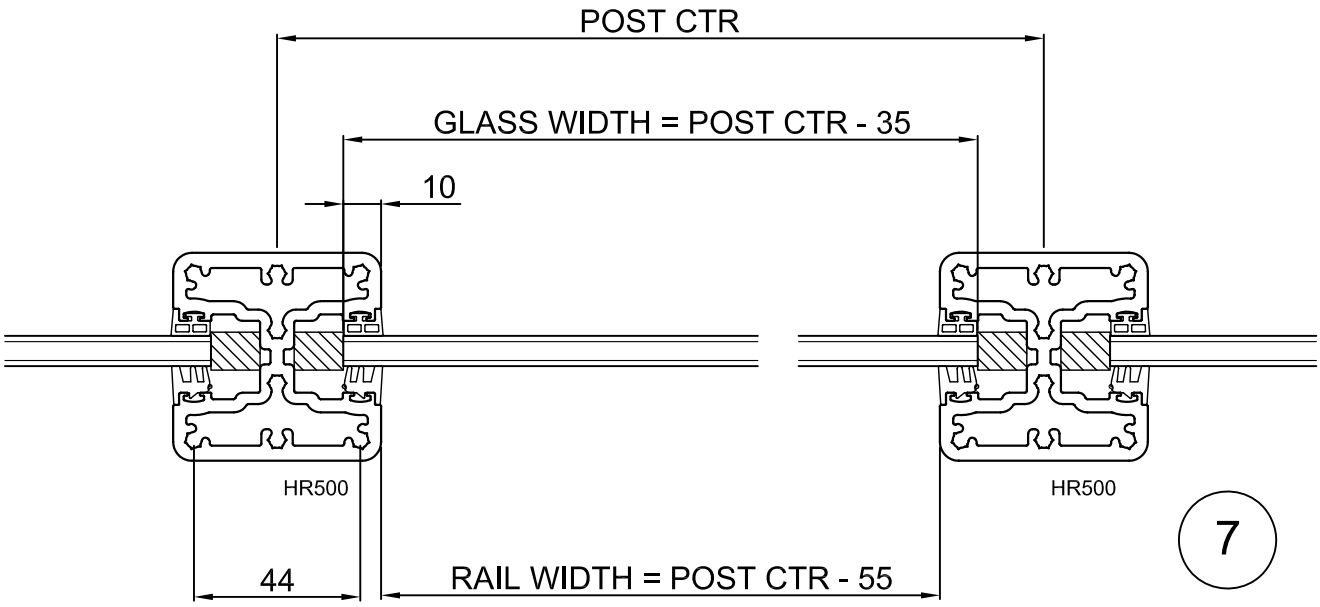

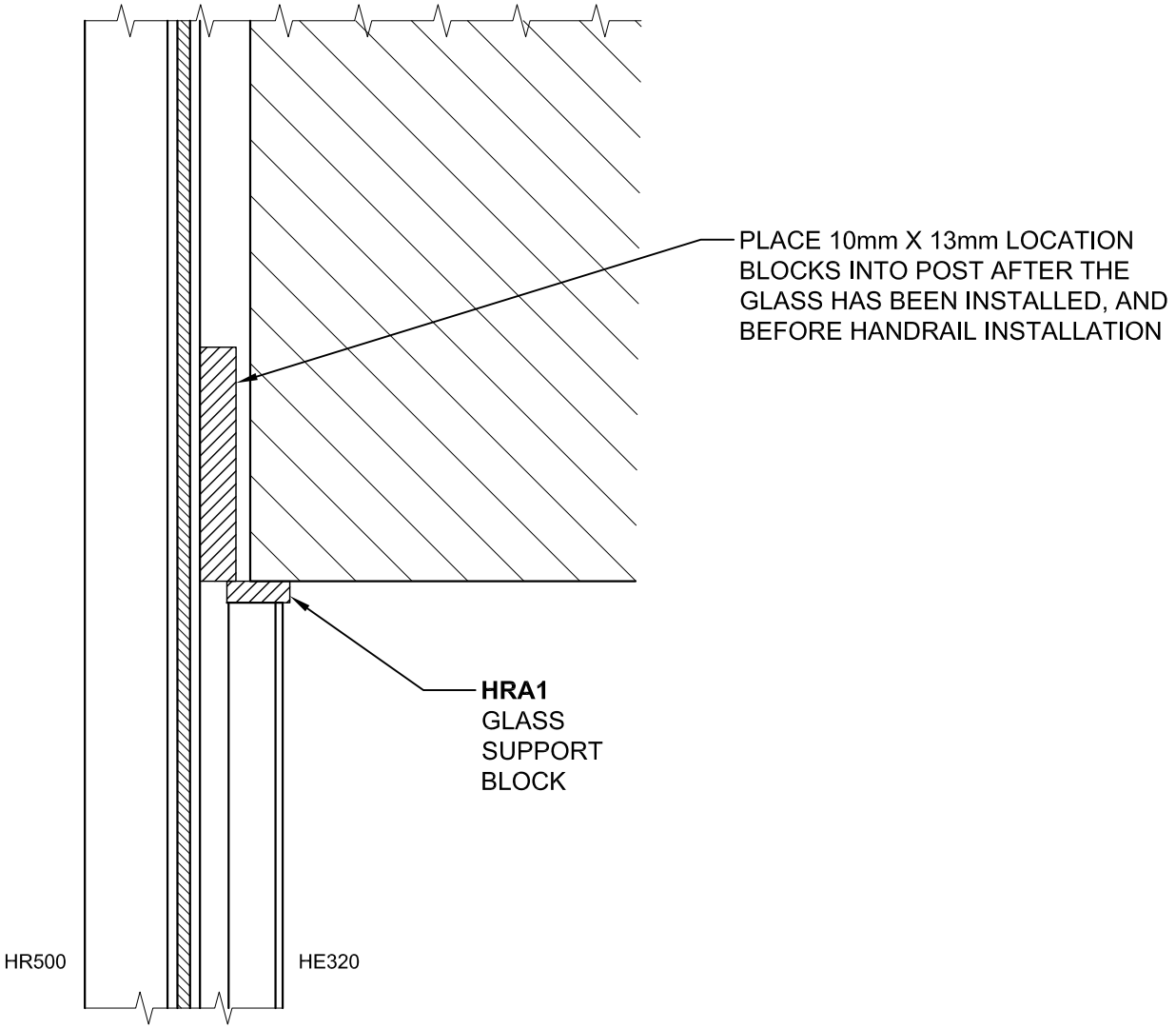

© ALSPEC
ALUMINIUM SPECIALTIES GROUP PTY LTD

BALUSTRADE DETAIL - 2 SIDE SUPPORT

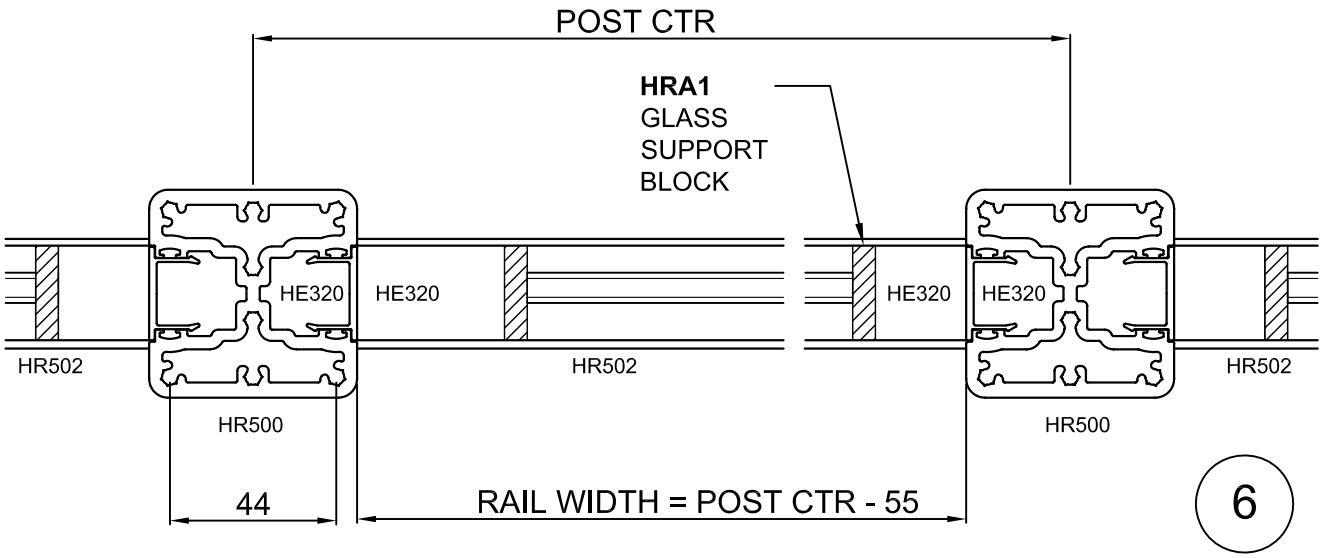

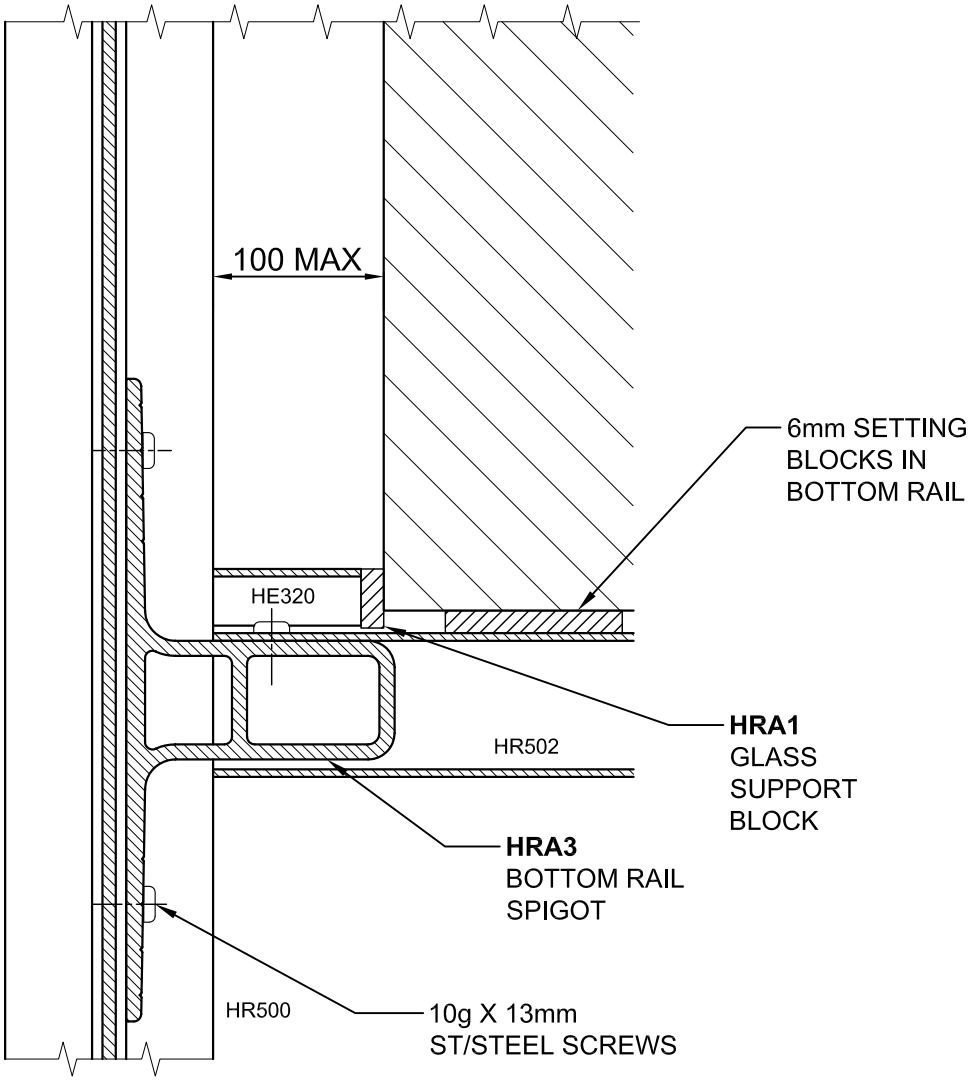

© ALSPEC
ALUMINIUM SPECIALTIES GROUP PTY LTD

VERTICAL DETAIL - 2 & 4 SIDE SUPPORT

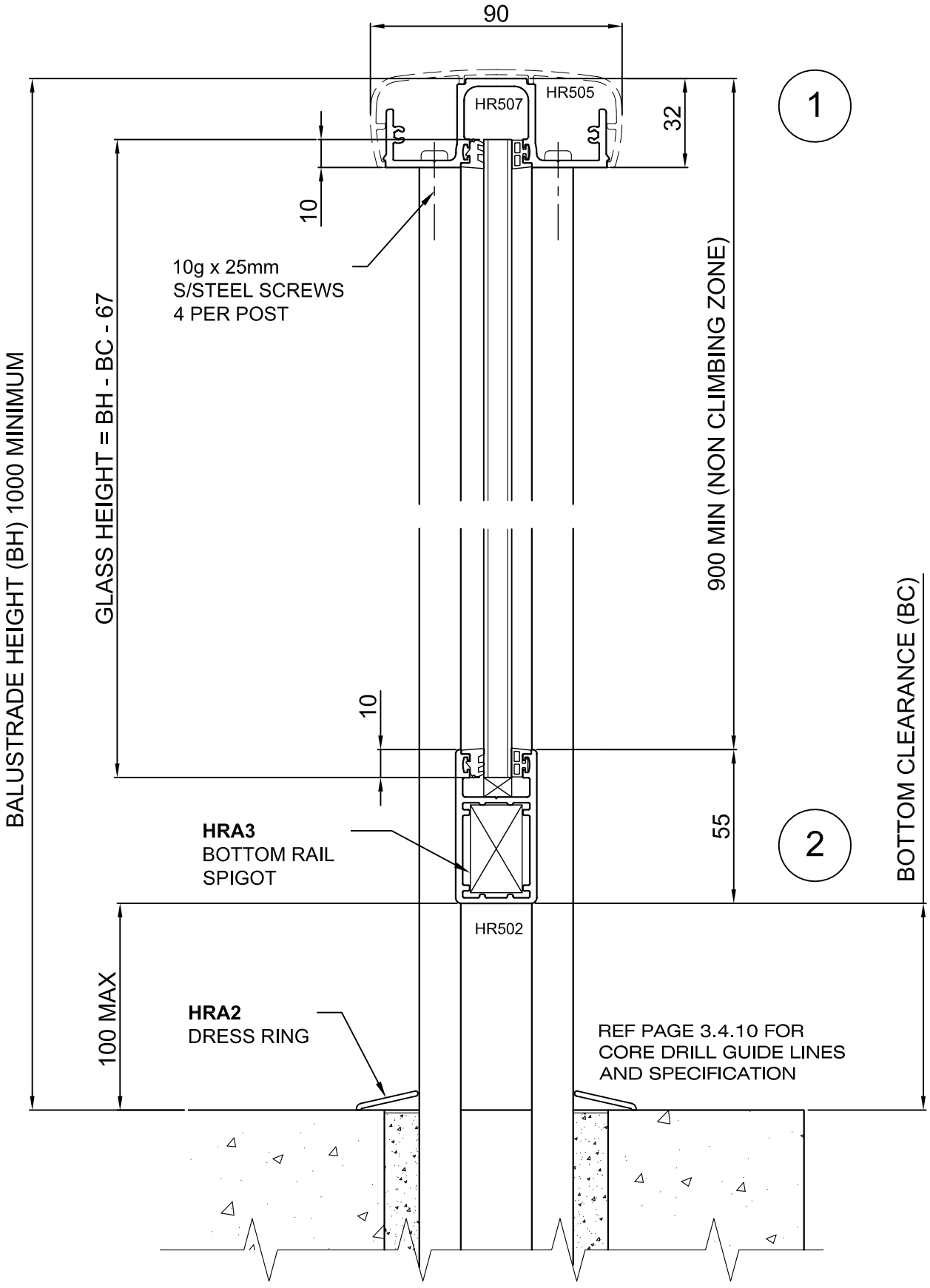

© ALSPEC
ALUMINIUM SPECIALTIES GROUP PTY LTD

VERTICAL DETAIL - 3 SIDE SUPPORT (NO BOTTOM RAIL)

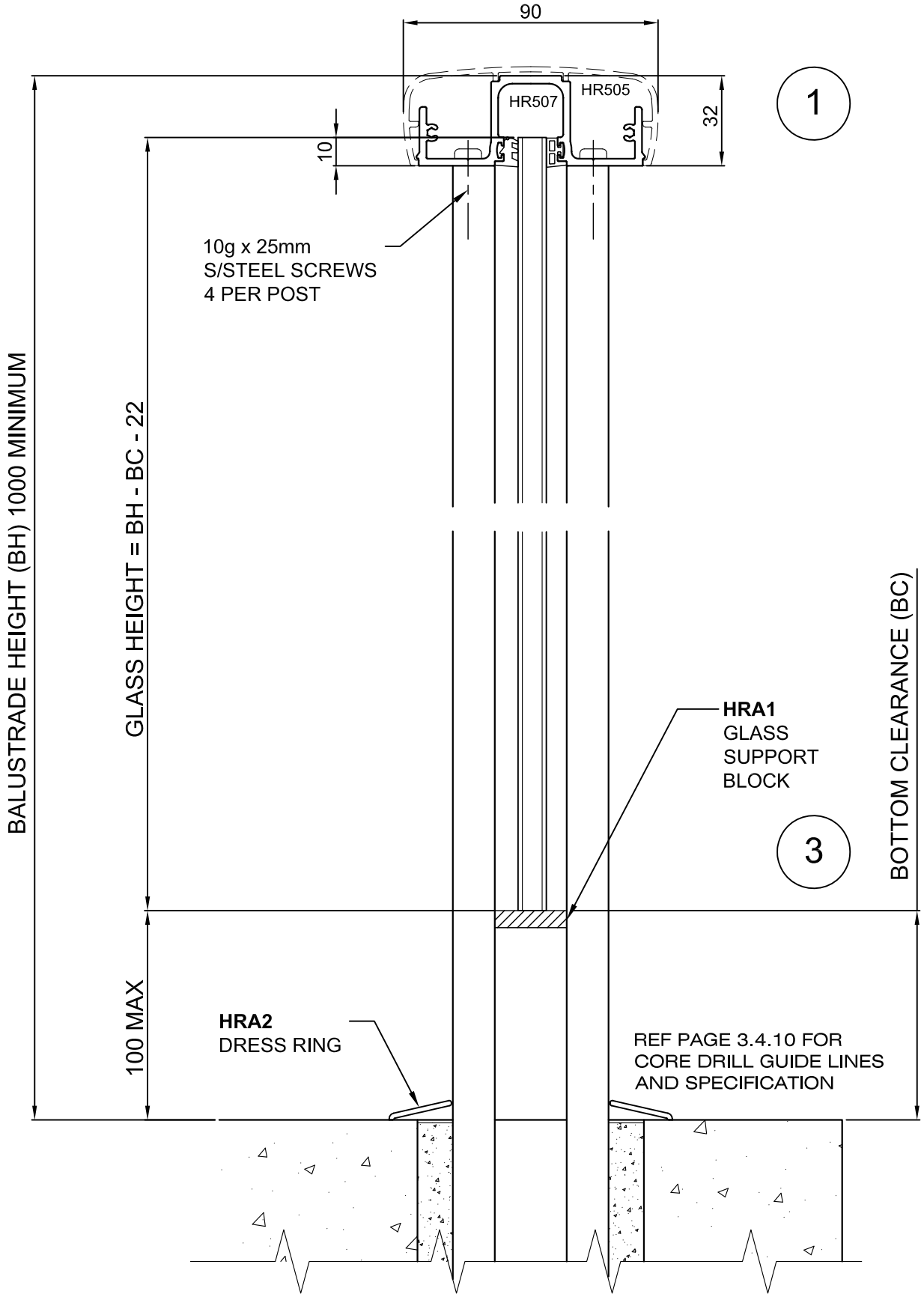

© ALSPEC
ALUMINIUM SPECIALTIES GROUP PTY LTD

VERTICAL DETAIL - 2 SIDE SUPPORT (POSTS ONLY)

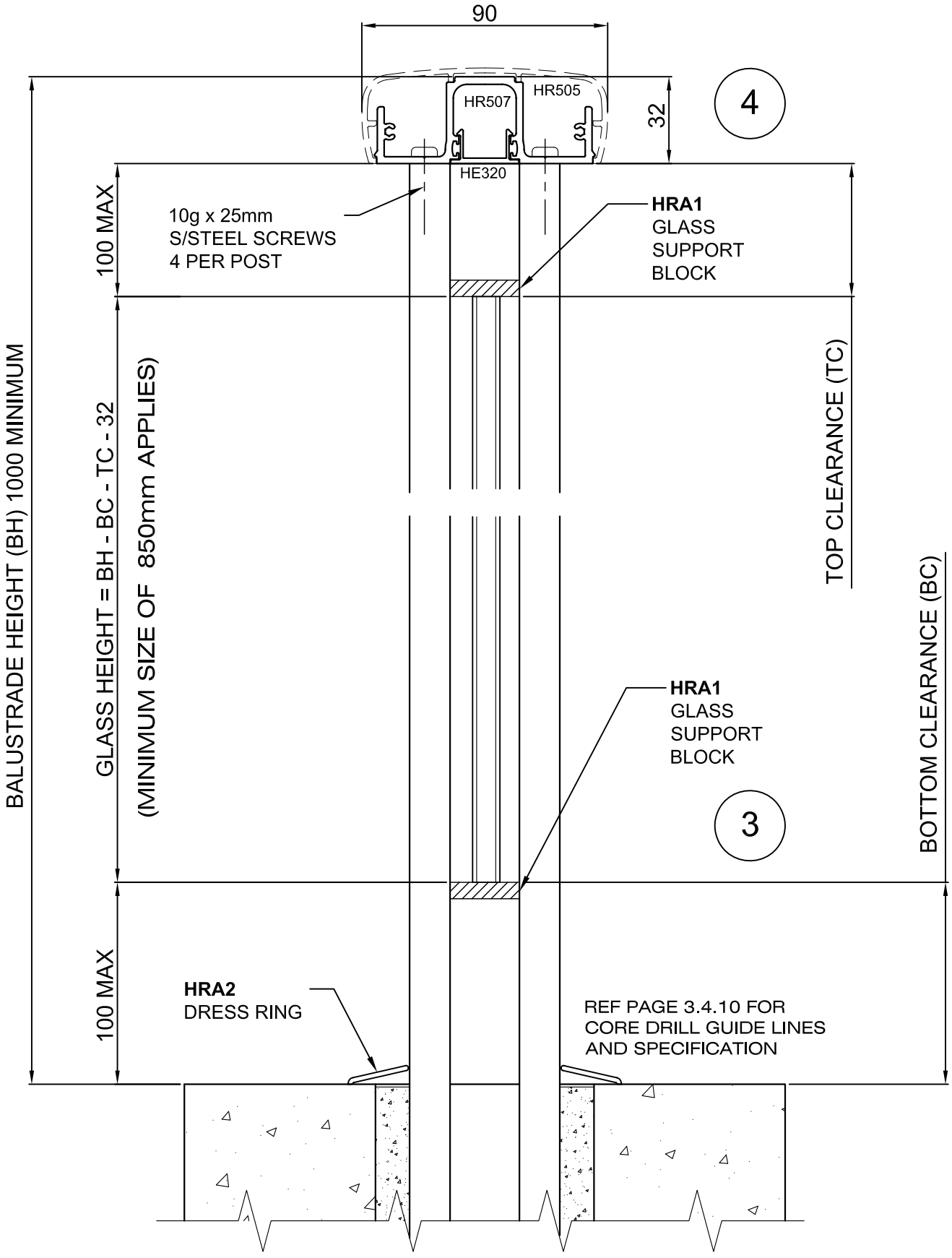

© ALSPEC
ALUMINIUM SPECIALTIES GROUP PTY LTD

BASE PLATE - TOP MOUNT

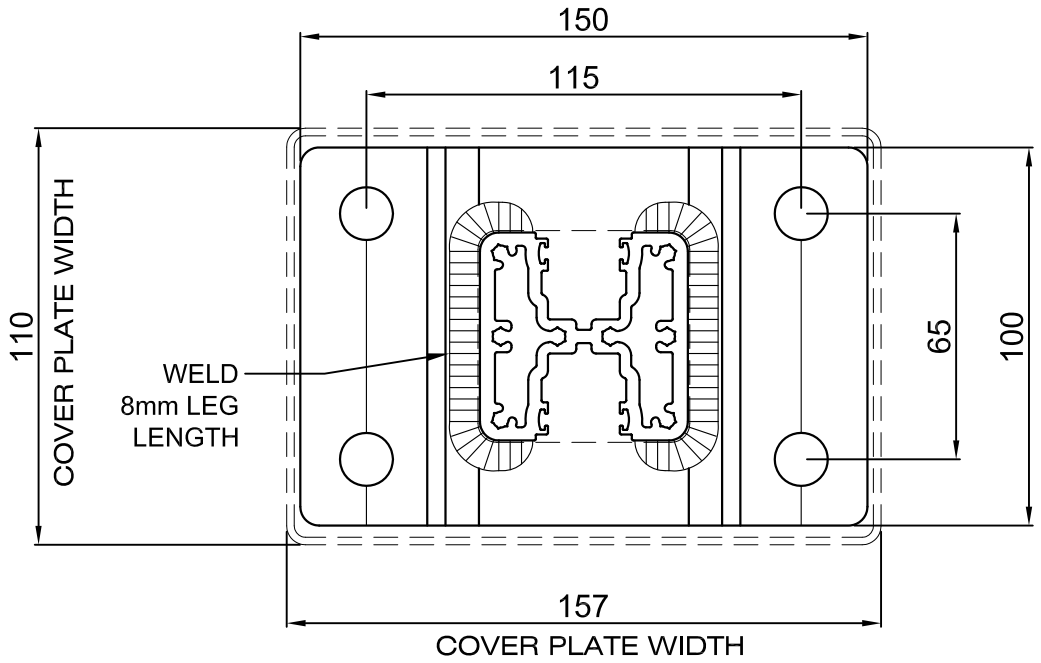

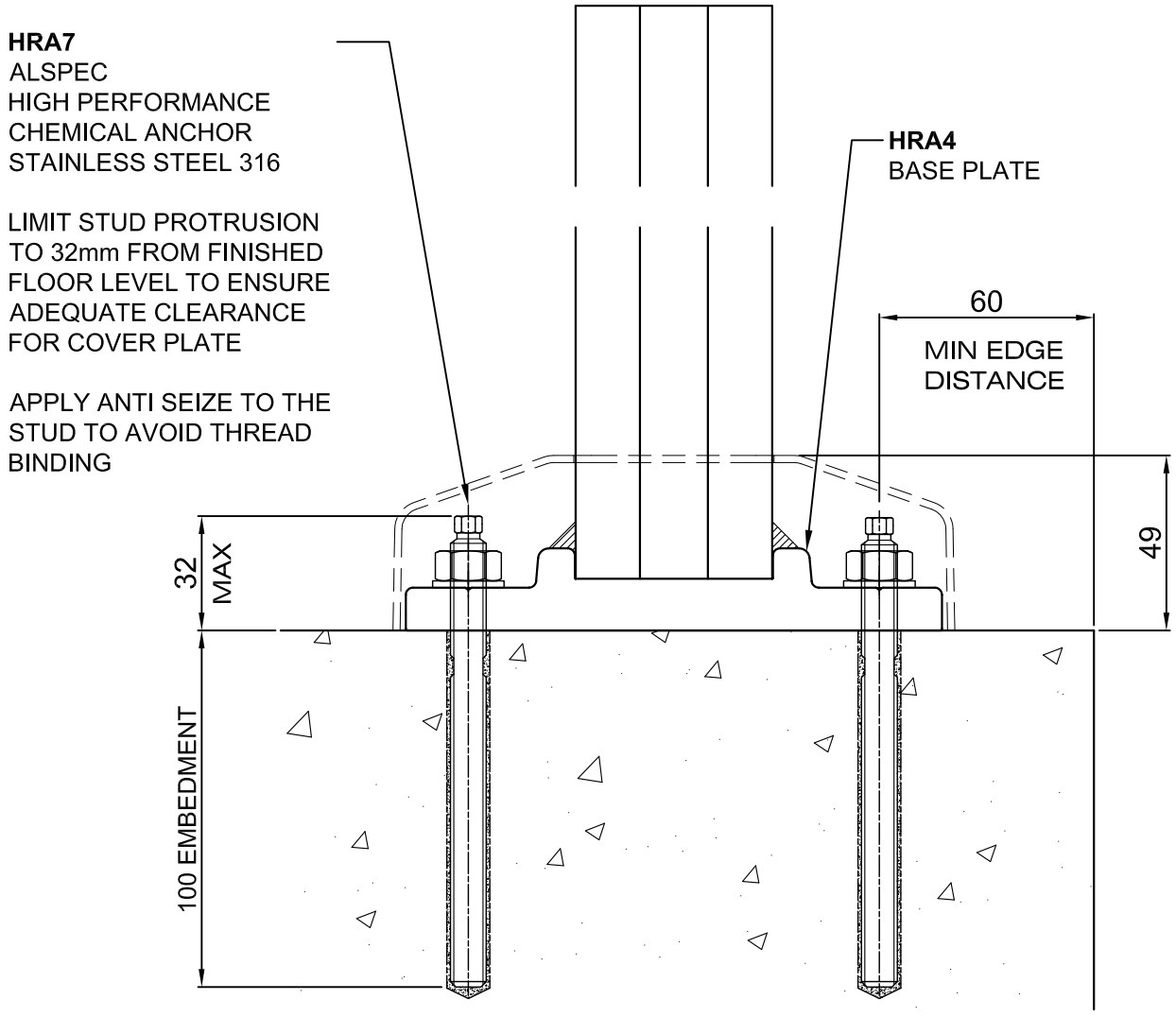

© ALSPEC
ALUMINIUM SPECIALTIES GROUP PTY LTD

BASE PLATE - TOP MOUNT (90 DEG)

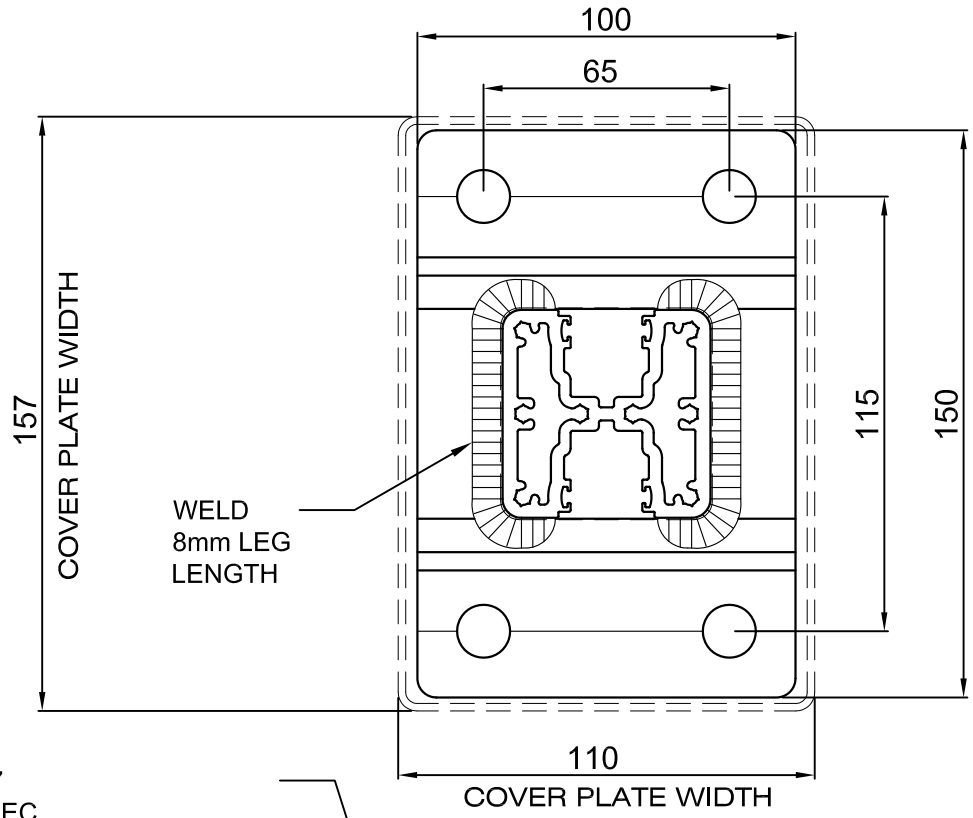

HRA7
ALSPEC
HIGH PERFORMANCE
CHEMICAL ANCHOR
STAINLESS STEEL 316

LIMIT STUD PROTRUSION TO 32mm FROM FINISHED FLOOR LEVEL TO ENSURE ADEQUATE CLEARANCE FOR COVER PLATE

APPLY ANTI SEIZE TO THE STUD TO AVOID THREAD BINDING

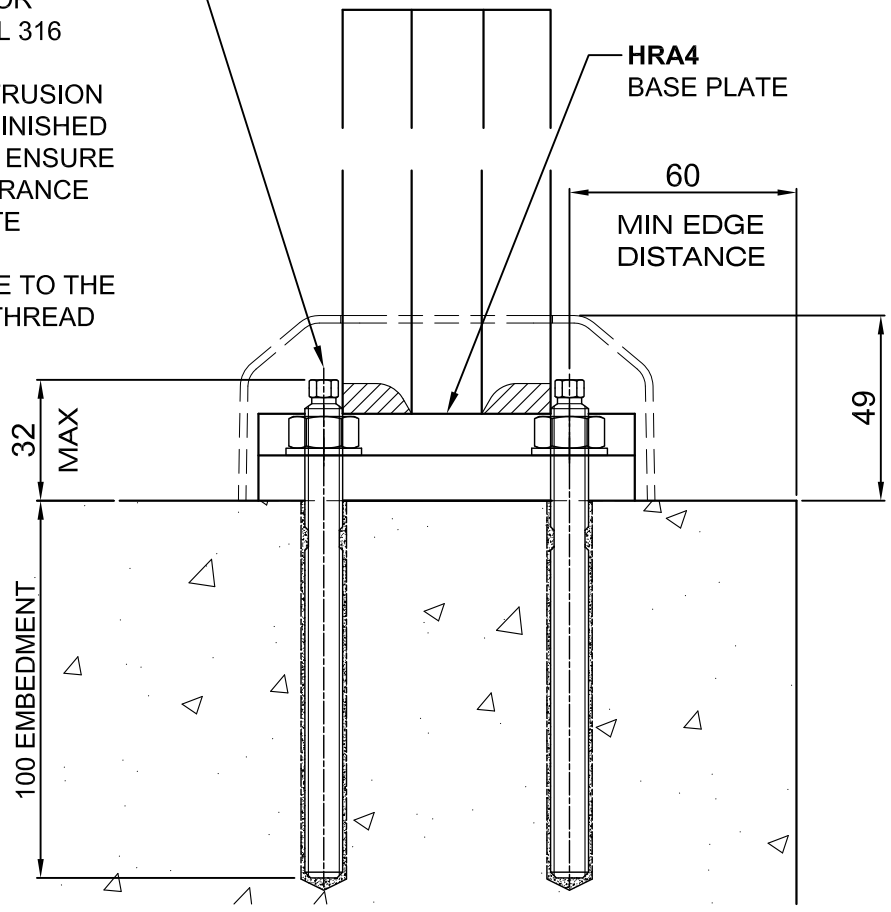

© ALSPEC
ALUMINIUM SPECIALTIES GROUP PTY LTD

BASE PLATE - SIDE MOUNT

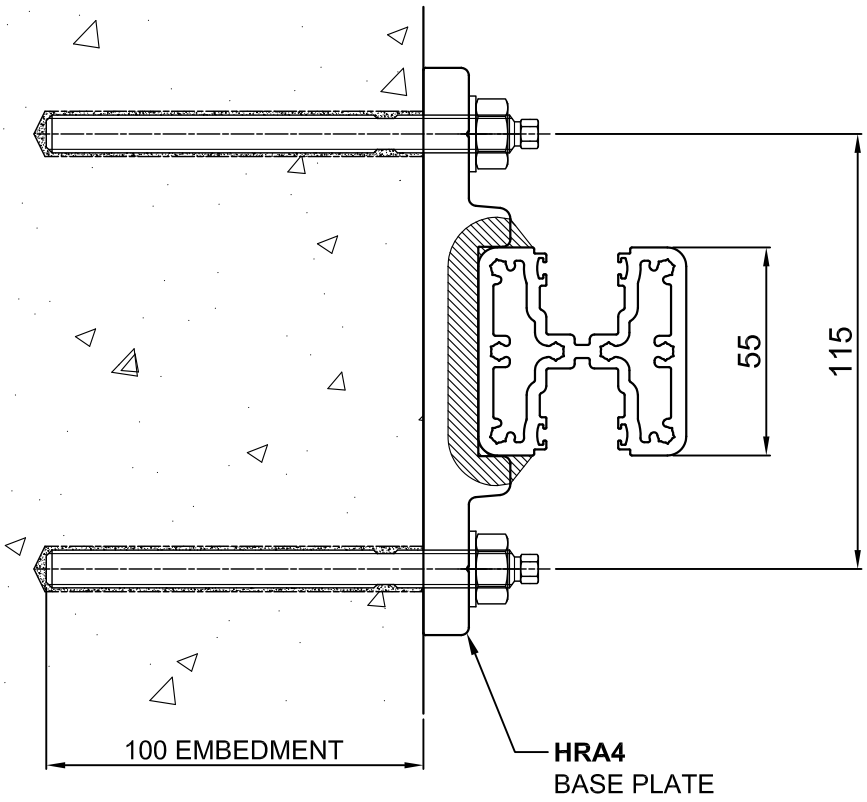

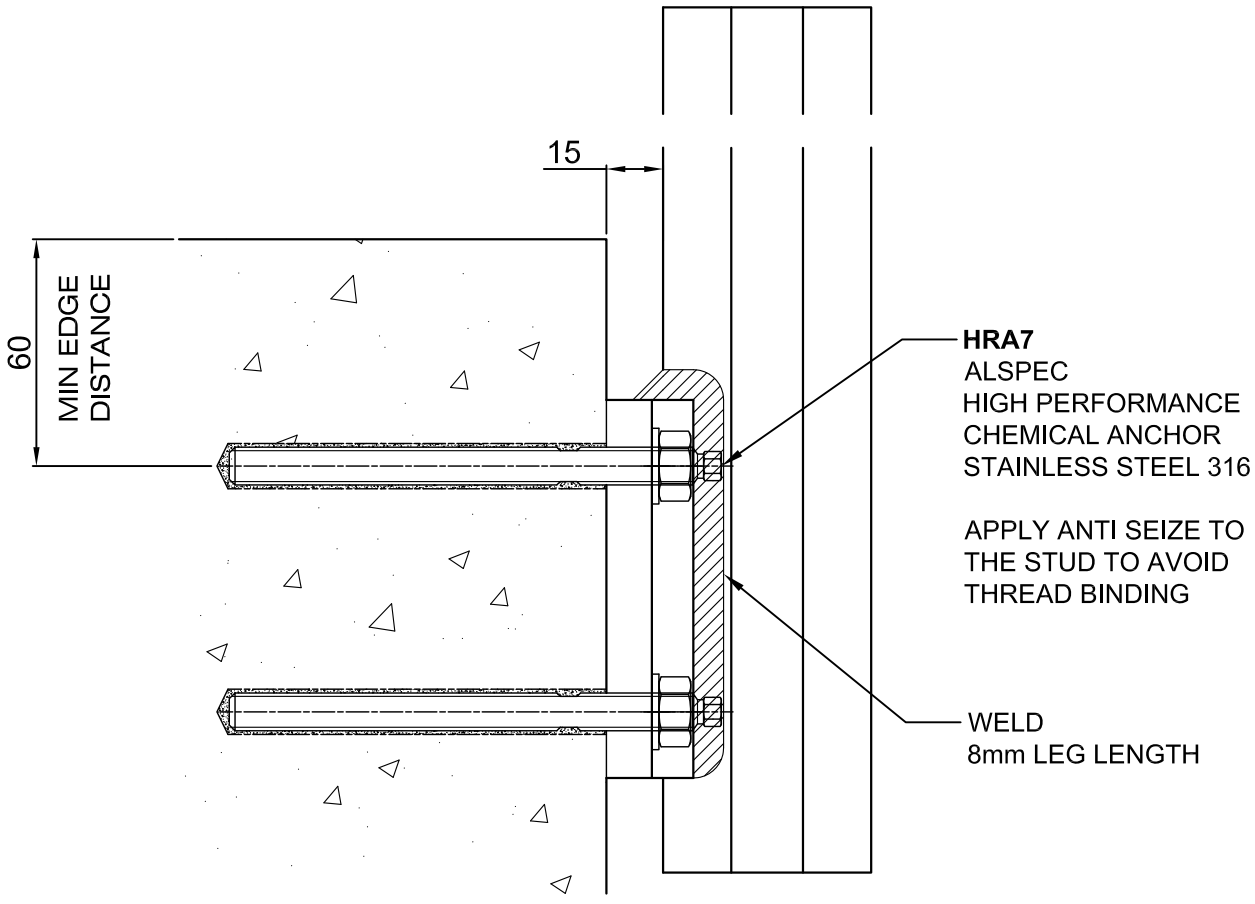

© ALSPEC
ALUMINIUM SPECIALTIES GROUP PTY LTD

CORE DRILL GUIDE

APPLICATION	EMBEDMENT DEPTH (32MPa CONCRETE)
C3, B, E BALCONIES, ROOF TOPS, ETC (IF THE AREA IS SUSCEPTIBLE TO OVER CROWDING REFER C5)	100mm
C1, C2, C3, D & C5 COMMERCIAL, RETAIL, PUBLIC SPACES AND AREAS SUSCEPTIBLE TO OVER CROWDING	120mm
HIGH WIND REGIONS ULTIMATE PRESSURES ABOVE 4kPa N6,C3,C4	120mm

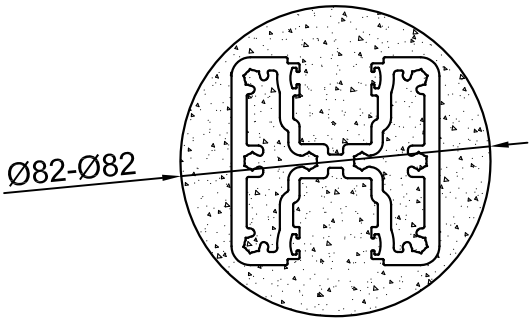

CORE DEPTH	GROUT VOLUME (Ø82 CORE)
100mm	415 ml
120mm	495 ml

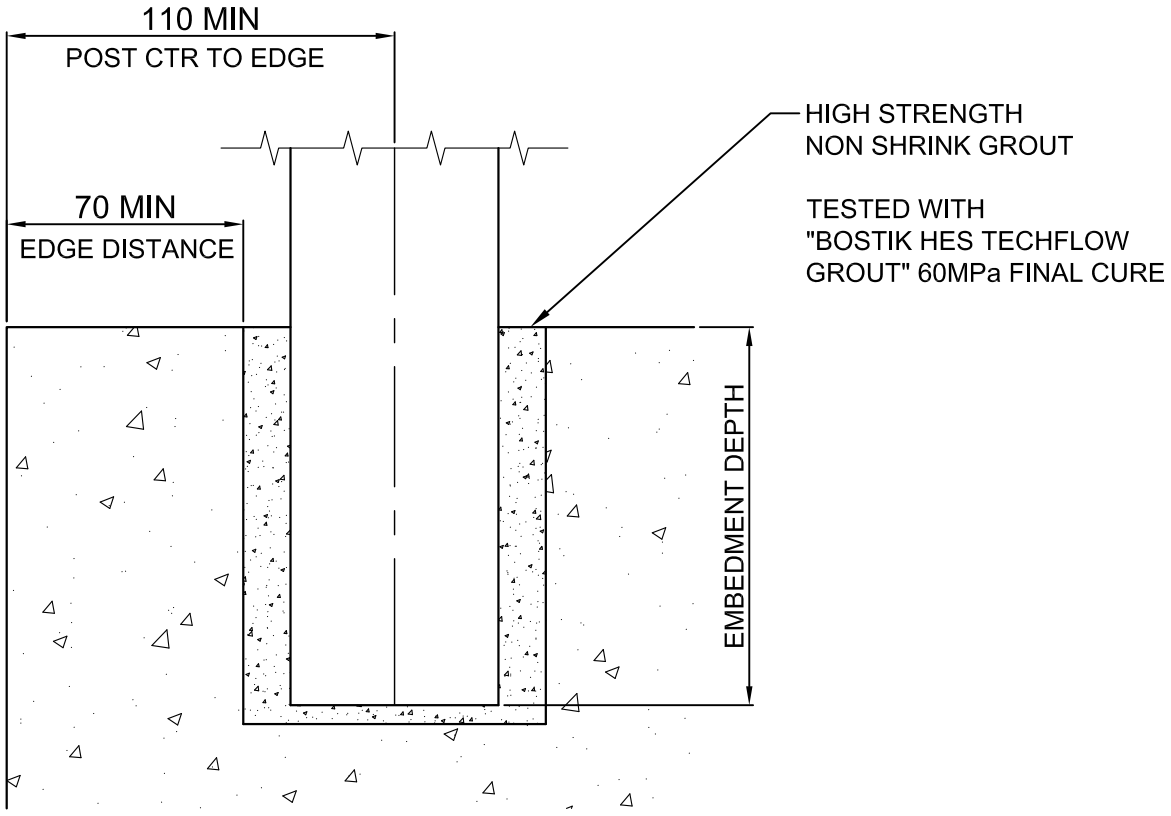

© ALSPEC
ALUMINIUM SPECIALTIES GROUP PTY LTD

BASE PLATE & BOTTOM RAIL ASSEMBLY

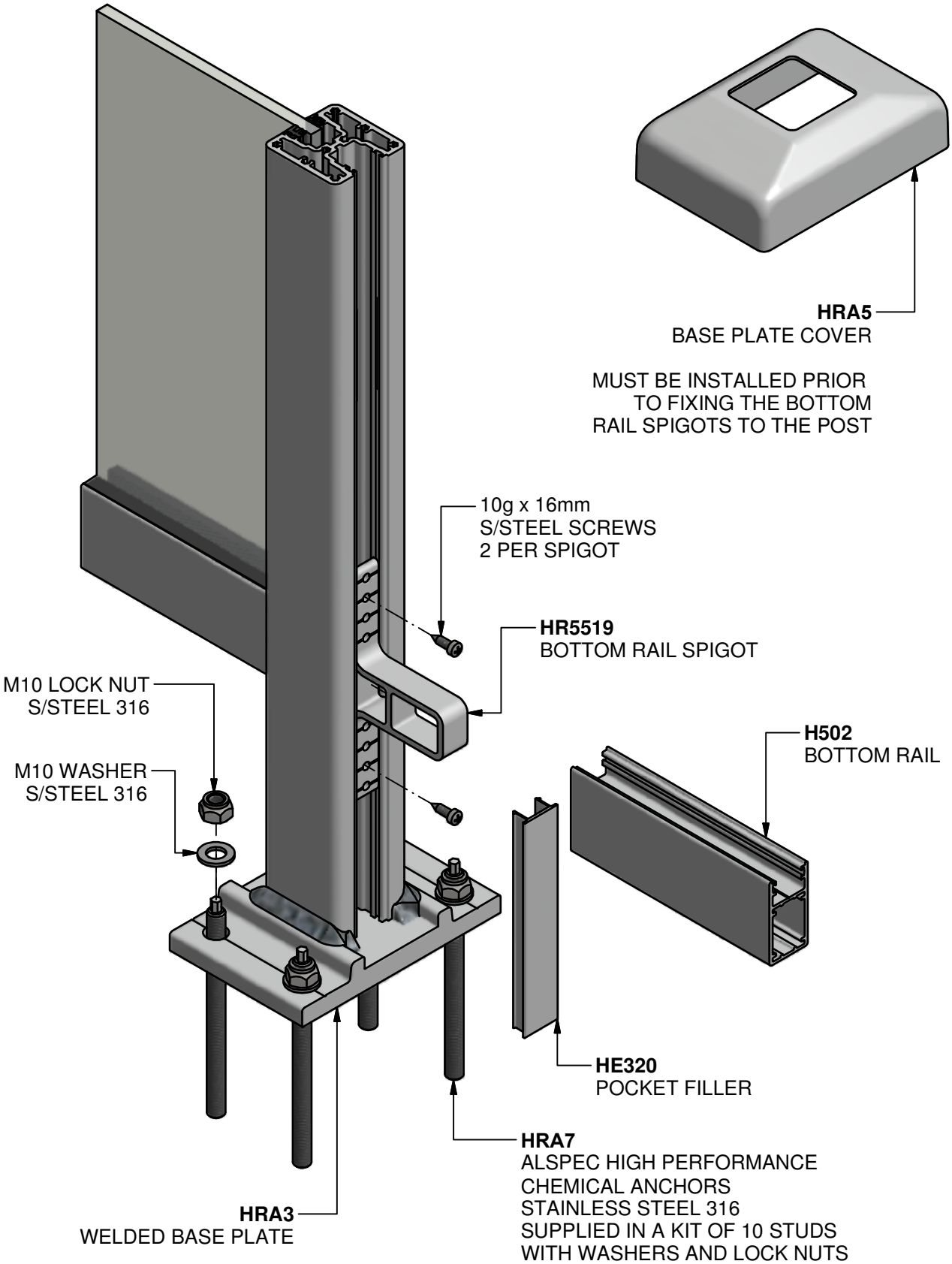

REFER PART NUMBERS IN SECTION 3.2

© ALSPEC
ALUMINIUM SPECIALTIES GROUP PTY LTD

POST ASSEMBLY (NO BOTTOM RAIL)

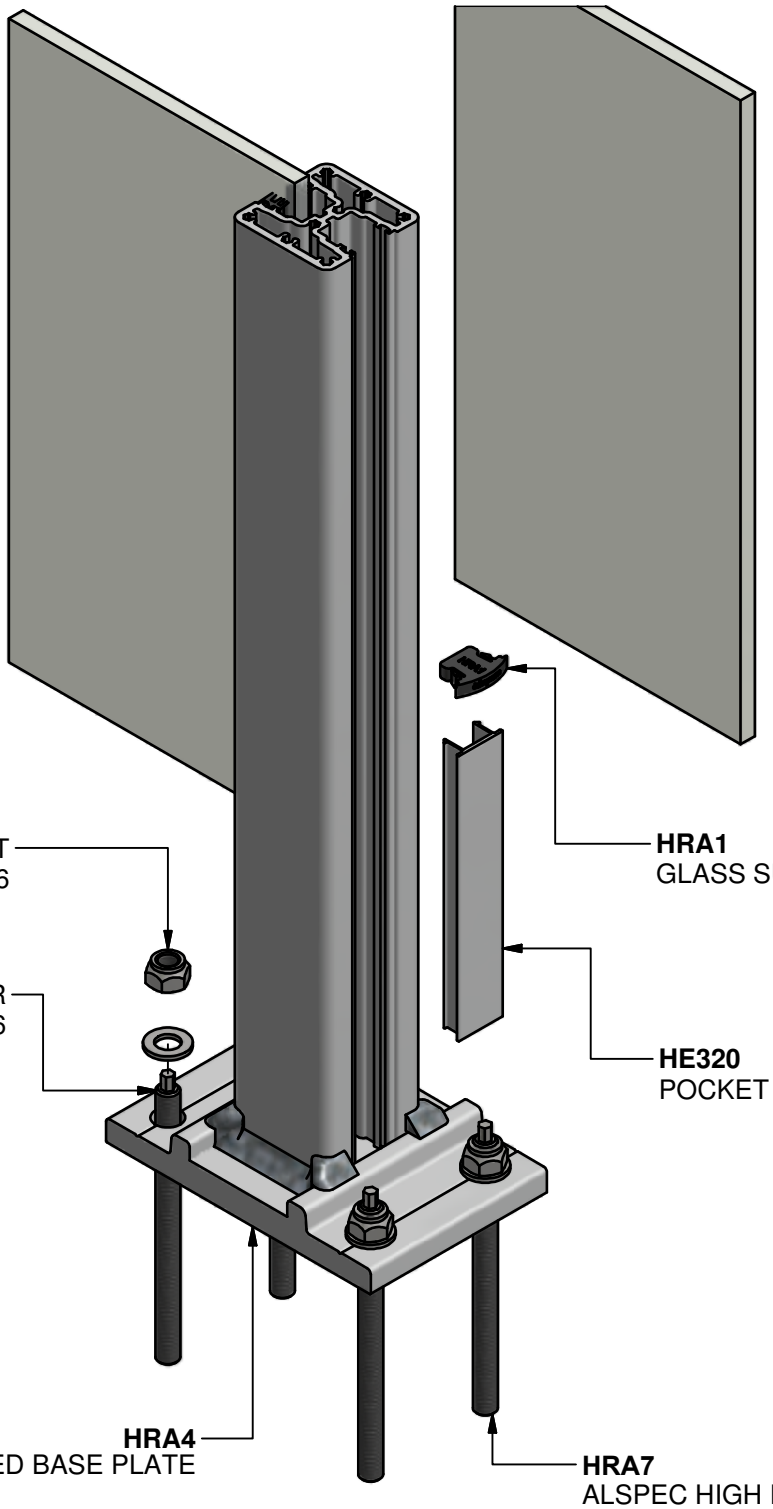

M10 LOCK NUT
S/STEEL 316

M10 WASHER
S/STEEL 316

HRA1
GLASS SUPPORT BLOCK

HE320
POCKET FILLER

HRA4
WELDED BASE PLATE

HRA7
ALSPEC HIGH PERFORMANCE
CHEMICAL ANCHORS
STAINLESS STEEL 316
SUPPLIED IN A KIT OF 10 STUDS
WITH WASHERS AND LOCK NUTS

REFER PART NUMBERS IN SECTION 3.2

© ALSPEC
ALUMINIUM SPECIALTIES GROUP PTY LTD

HR500 BALUSTRADE

TOP RAIL ASSEMBLY

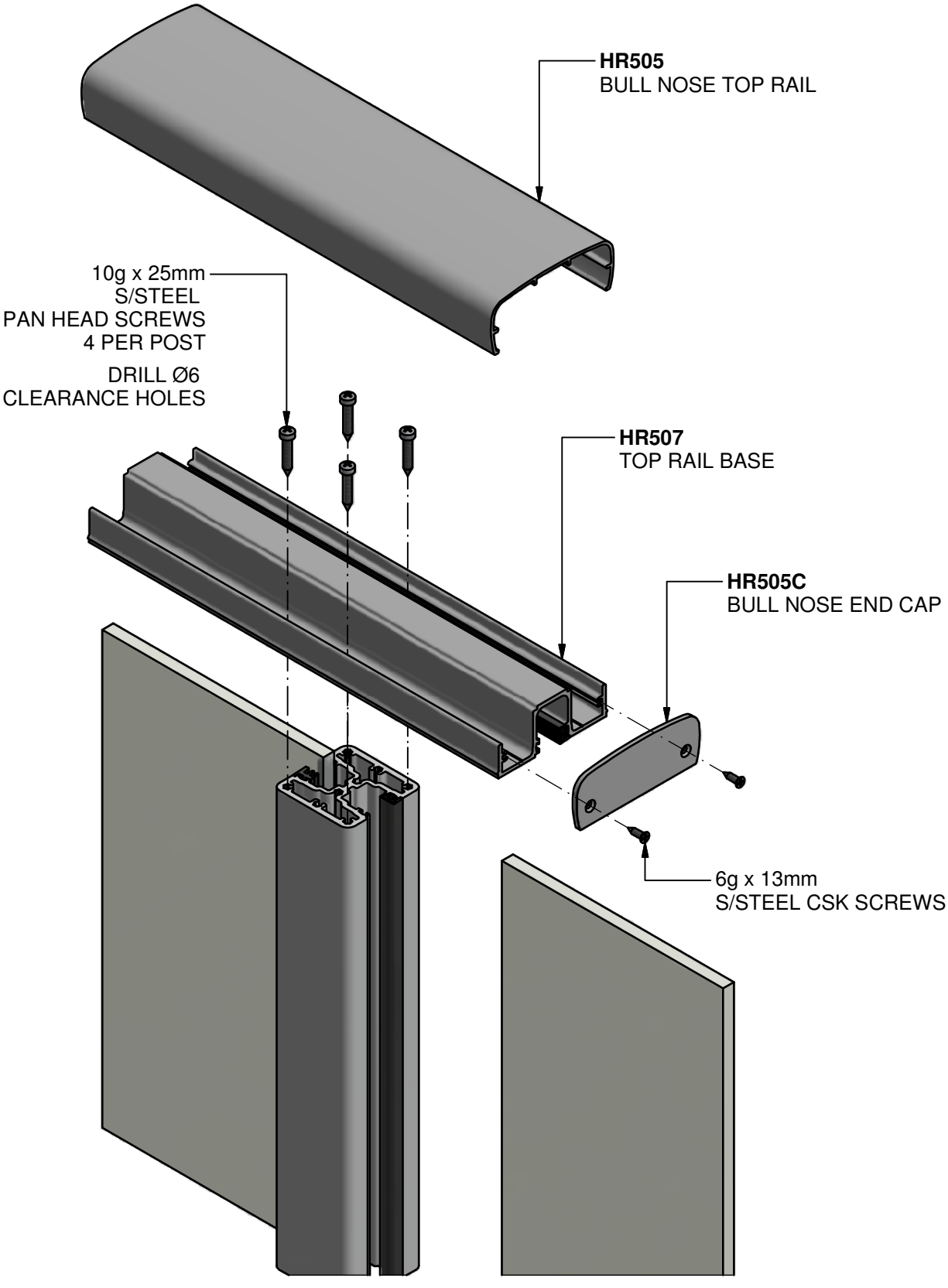

© ALSPEC
ALUMINIUM SPECIALTIES GROUP PTY LTD

BASE PLATE MOUNTING OPTIONS

The HRA4 base plate has been specifically engineered to be equally as strong when mounted in any of the below configurations.

Refer loading charts for base plate application and size matrix.
Not suitable for C5 applications.

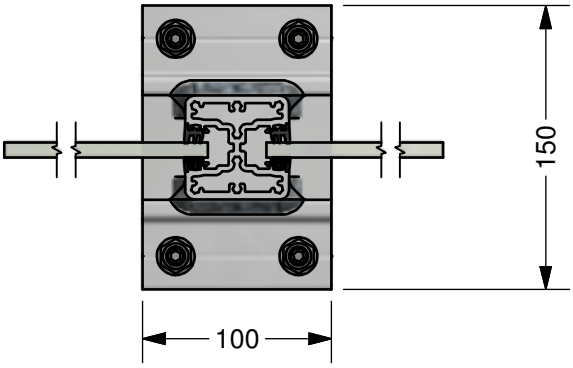

MOUNTED 90˚ TO GLASS

Ref Page 3.4.5 for fixing details and guidlines

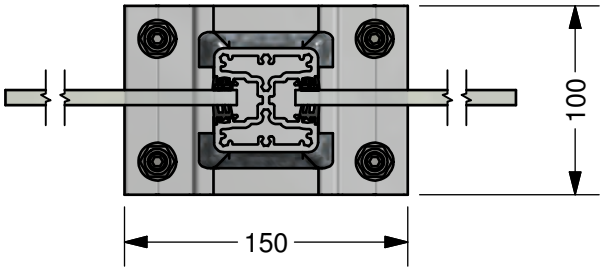

MOUNTED INLINE WITH GLASS

Ref Page 3.4.6 for fixing details and guidlines

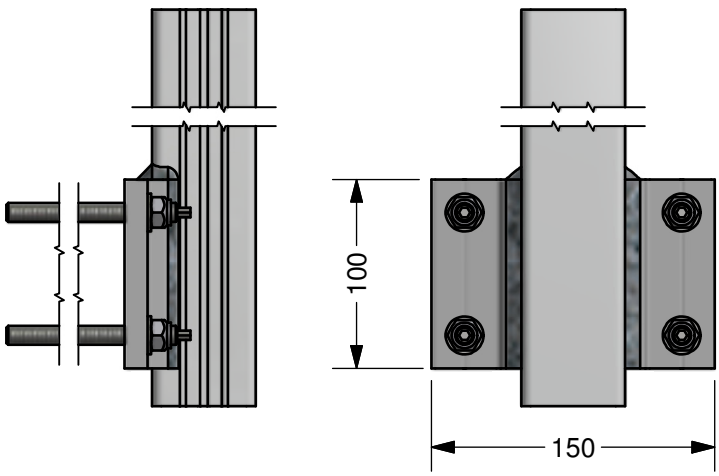

SIDE MOUNTED

Ref Page 3.4.7 for fixing details and guidlines

No base plate cover is available in this application.

© ALSPEC
ALUMINIUM SPECIALTIES GROUP PTY LTD

BASE PLATE WELDING DETAILS

Refer below for fillet weld locations. All welds to have an 8mm minimum leg length and should not encroach on the glazing pocket. Recommended filler wire 4043 or 5356

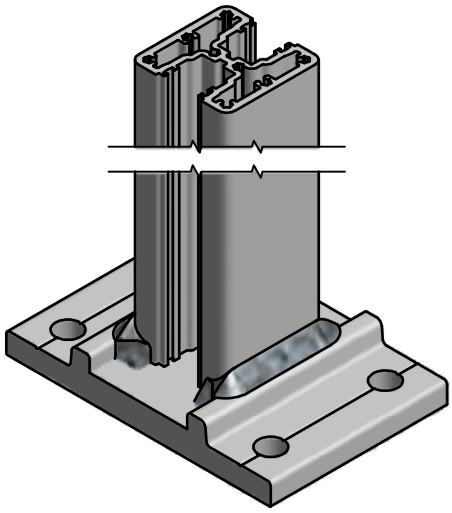

MOUNTED 90˚ TO GLASS

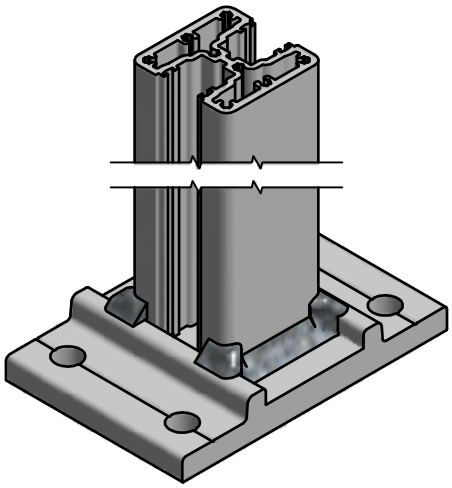

MOUNTED INLINE WITH GLASS

SIDE MOUNTED
BASE PLATE

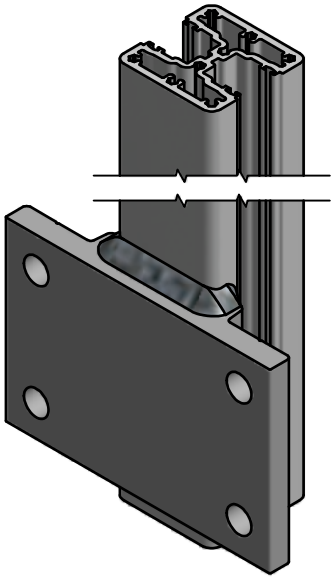

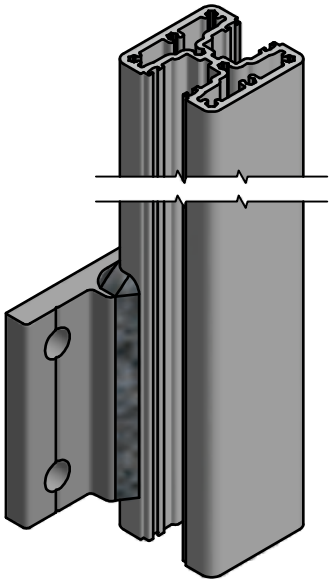

© ALSPEC
ALUMINIUM SPECIALTIES GROUP PTY LTD

CHEMICAL ANCHOR INSTALLATION DETAILS (CAPSULE)

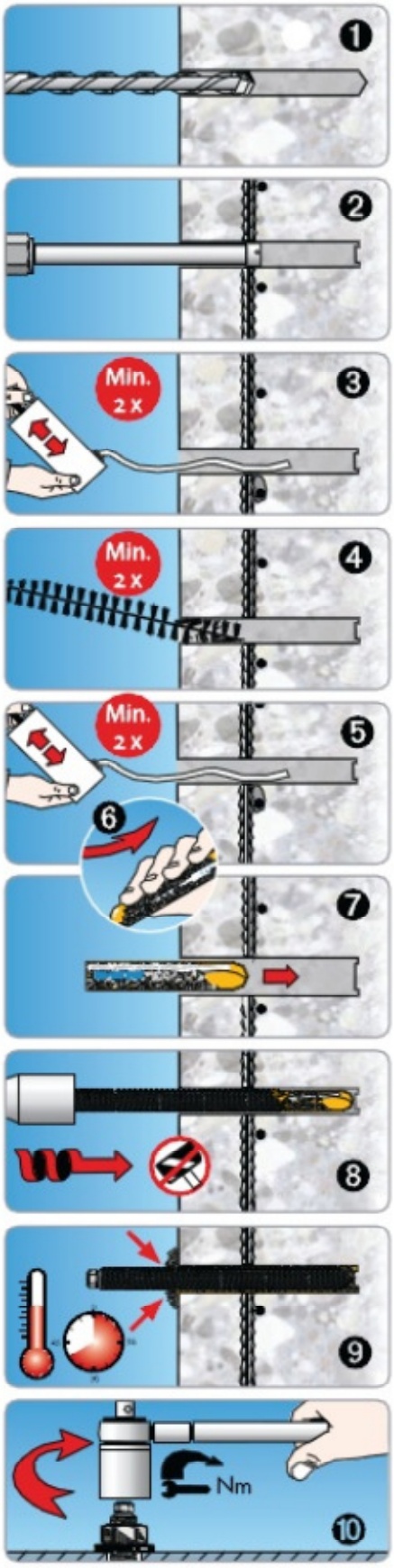

Installation Instructions

Drilling the anchor hole
Drill the anchor hole with a rotary hammer according to the dimensions in the Installation Dimensions Table.

In reinforced concrete use a diamond drilling machine (Not included in ETA)

Cleaning the anchor hole
Clean anchor hole thoroughly by min. 2x blowing out min. 2x brushing and min. 2x blowing out . Remove any remaining water from drill hole.

Usability of the capsule
Usability is given provided the glass capsule is not damaged and the resin, at lukewarm temperature, runs easily inside the capsule.

Inserting the capsule
Insert capsule into the cleaned hole

Installing the anchor rod
Install a clean anchor rod (free of any oil, grease or oxidation) with a rotary hammer (250-500 rpm). Stop rotating immediately upon reaching the bottom of the anchor hole. Overspinning leads to emptying the anchor hole.

Never only hammer in anchor rods. Always wear safety goggles when installing the anchors.

The installation is correct when the marking on the anchor rod is level with the concrete surface and the void around the anchor rod is filled completely.

Curing times
Observe curing times before loading the anchor. Shown temperatures are concrete temeratures. Depending upon the humidity of the concrete, longer curing times may become necessary. Do not disturb or load anchor rod before the specified curing time has elapsed.

Concrete Temperature	Min. Curing Time in Dry holes	Min. Curing Time in damp holes
≥ -5°C	5 hrs.	10 hrs.
≥ 5°C	1 hr.	2 hrs.
≥ 20°C	20 min.	40 min.
≥ 30°C	10 min.	20 min.

CHEMICAL ANCHOR INSTALLATION DETAILS (INJECTION)

INSTALLATION INSTRUCTIONS

Solid Base Materials

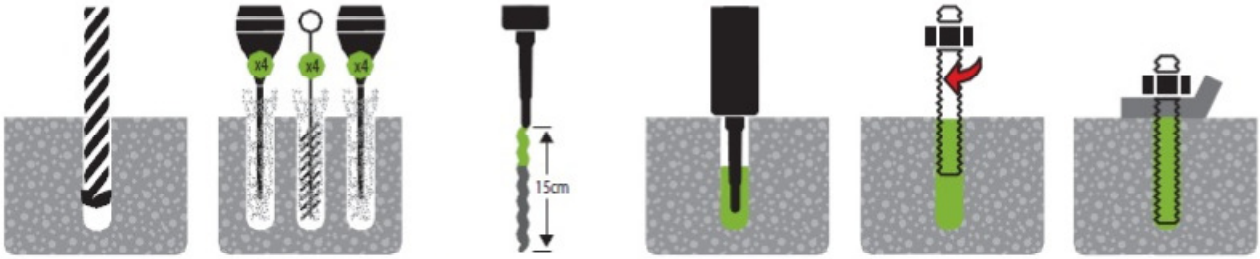

- Hole preparation should be to correct diameter and depth.
- Clean out hole thoroughly of dust and spoil by repeat blowing and brushing action.
- Unscrew Cap and screw on mixing nozzle supplied and place in suitable applicator tool.
- For new cartridges dispense a bead of adhesive until even and consistent colour is present to ensure correct mix of adhesive
- Place nozzle to the rear of the hole and pump adhesive whilst slowly withdrawing the nozzle back, avoid creating air pockets and fill the hole at least half full.
- Push the Rod/Stud or Bar into the adhesive while turning one way slowly until correct embedment depth is reached and some adhesive has flowed to the top of the hole. Always ensure that anchor rods / bars are clean and free from free from oil, grease and dirt.
- Once installed, do not touch or load the anchor until the adhesive is fully cured. (See appropriate adhesive label for curing times).

© ALSPEC
ALUMINIUM SPECIALTIES GROUP PTY LTD

Glazing Details - Captive Glazing

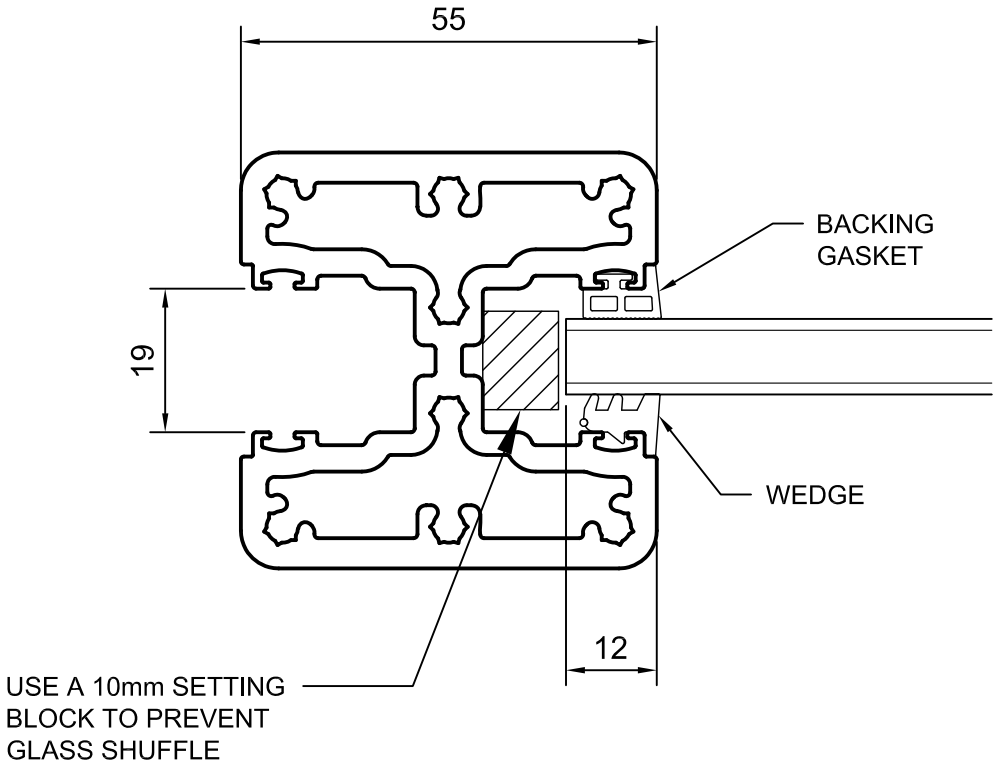

	WEDGE		CO-EXTRUDED BACKING GASKET
GLASS THICKNESS	ID COLOUR	REF. (GAP)	REF. (GAP)
8mm	RED	GR47 (7mm)	CE37 (4mm)
10mm	BLUE	GR45 (5mm)	CE37 (4mm)
12mm	BROWN	GR43 (3mm)	CE37 (4mm)
15mm	-	GR2 (2mm)	GR2 (2mm)

Note: GR2 is a non captive glazing option.
All glass to be toughened glass.

GLASS THICKNESS	GLASS WEIGHT
8mm	21 kg/m^2
10mm	26 kg/m^2
12mm	31 kg/m^2
15mm	39 kg/m^2

© ALSPEC
ALUMINIUM SPECIALTIES GROUP PTY LTD